2013 CALIFORNIA ACCESS COMPLIANCE ADVISORY REFERENCE MANUAL

STATE OF CALIFORNIA
DEPARTMENT OF GENERAL SERVICES

DIVISION OF THE STATE ARCHITECT

This advisory manual includes the 2013 Intervening Code Adoption Cycle Supplement published on January 1, 2015, effective July 1, 2015

There are publishing errors in the 2013 Intervening Code Adoption Cycle Supplement to the 2013 California Building Code (effective July 1, 2015) as noted by footnotes with the approved language in the following sections:

1. 406.4 Public parking garages.
   406.4.1 Clear height.

2. 907.4.2 Manual fire alarm boxes.
   907.4.2.2 Height.

3. *11B-224.7 Housing at a place of education.*

4. Figure *11B*-407.2.3.1

An errata to address these errors will not be published by the International Code Council prior to the adoption and publication of the 2016 California Building Code.

These items will be submitted for correction in the 2015 Triennial Code Adoption Cycle for adoption as part of the 2016 California Building Code.

Copyright © 2015 California Department of General Services, Division of the State Architect
All Rights Reserved.
Any unauthorized reproduction or distribution of this material is prohibited.

CHAPTER 1
SCOPE AND ADMINISTRATION

CHAPTER 1 – MATRIX ADOPTION TABLE

Adopting Agency		DSA	
		AC	SS
Adopt entire California Chapter			
Adopt entire California Chapter as amended (amended sections listed below)			
Adopt only those sections that are listed below		X	
Chapter / Section	Codes		
Division I			
1.1	CA	X	
1.2.2	CA	X	
1.9.1 – 1.9.1.8	CA	X	
Division II			
101.1 – 101.4.5	CA	X	
104.11	IBC	X	
111.2	IBC	X	

CHAPTER 1
SCOPE AND ADMINISTRATION
DIVISION I
CALIFORNIA ADMINISTRATION

SECTION 1.1
GENERAL

1.1.1 Title. *These regulations shall be known as the California Building Code, may be cited as such and will be referred to herein as "this code." The California Building Code is Part 2 of twelve parts of the official compilation and publication of the adoption, amendment and repeal of building regulations to the California Code of Regulations, Title 24, also referred to as the California Building Standards Code. This part incorporates by adoption the 2012 International Building Code of the International Code Council with necessary California amendments.*

DSA

Advisory 1.1.1 Title. The 2013 triennial edition of California Code of Regulations, Title 24 consists of 12 parts:

- Part 1 – California Building Standards Administrative Code
- Part 2 – California Building Code
- Part 2.5 – California Residential Code
- Part 3 – California Electrical Code
- Part 4 – California Mechanical Code
- Part 5 – California Plumbing Code
- Part 6 – California Energy Code
- Part 8 – California Historical Building Code
- Part 9 – California Fire Code

- Part 10 – California Existing Building Code
- Part 11 – California Green Building Standards Code
- Part 12 – California Referenced Standards Code ■

1.1.2 Purpose. *The purpose of this code is to establish the minimum requirements to safeguard the public health, safety and general welfare through structural strength, means of egress facilities, stability, access to persons with disabilities, sanitation, adequate lighting and ventilation and energy conservation; safety to life and property from fire and other hazards attributed to the built environment; and to provide safety to fire fighters and emergency responders during emergency operations.*

DSA

Advisory 1.1.2 Purpose. CA H&S Code §19955 et al. requires public accommodations and facilities constructed in this state with private funds to adhere to the accessibility provisions of Chapter 7 (commencing with Section 4450) of Division 5 of Title 1 of the Government Code. Under CA H&S Code §19958, city and county building departments have the responsibility to enforce the statutory requirements of CA H&S Code §19955 et al. and CA Gov. Code §4450 et al.

CA Gov. Code §4450(a) requires buildings and facilities constructed in this state by the use of state, county, or municipal funds, or the funds of any political subdivision of the state shall conform to the building standards published in the California Building Standards Code relating to access for persons with disabilities and the other regulations adopted pursuant to Section 4450. CA Gov. Code §4453 vests enforcement authority to the Director of the Department of General Services (generally delegated to the Division of the State Architect) where state funds are utilized for any project or where funds of counties, municipalities, or other political subdivisions are utilized for the construction of elementary, secondary, or community college projects. Additionally, CA Gov. Code §4453 vests enforcement authority to the governing bodies thereof where funds of counties, municipalities, or other political subdivisions are utilized except as otherwise provided above. ■

1.1.3 Scope. *The provisions of this code shall apply to the construction, alteration, movement, enlargement, replacement, repair, equipment, use and occupancy, location, maintenance, removal and demolition of every building or structure or any appurtenances connected or attached to such buildings or structures throughout the State of California.*

DSA

Advisory 1.1.3 Scope. The California Building Code (CBC) accessibility provisions are applicable to new construction projects as well as alterations (as defined) of existing buildings and facilities. In alteration projects, these provisions apply to the area of new work, and include the path of travel requirements found in Section 11B-202.4. ■

1.1.3.1 Nonstate-regulated buildings, structures and applications. *Except as modified by local ordinance pursuant to Section 1.1.8, the following standards in the California Code of Regulations, Title 24, Parts 2, 2.5, 3, 4, 5, 6, 9, 10 and 11 shall apply to all occupancies and applications not regulated by a state agency.*

1.1.3.2 State-regulated buildings, structures and applications. *The model code, state amendments to the model code, and/or state amendments where there are no relevant model code provisions shall apply to the following buildings, structures, and applications regulated by state agencies as specified in Sections 1.2 through 1.14, except where modified by local ordinance pursuant to Section 1.1.8. When adopted by a state agency, the provisions of this code shall be enforced by the appropriate enforcing agency, but only to the extent of authority granted to such*

agency by the state legislature.

Note: *See Preface to distinguish the model code provisions from the California provisions.*

1. *State-owned buildings, including buildings constructed by the Trustees of the California State University, and to the extent permitted by California laws, buildings designed and constructed by the Regents of the University of California, and regulated by the Building Standards Commission. See Section 1.2 for additional scope provisions.*

2. *Local detention facilities regulated by the Corrections Standards Authority. See Section 1.3 for additional scope provisions.*

3. *Barbering, cosmetology or electrolysis establishments, acupuncture offices, pharmacies, veterinary facilities and structural pest control locations regulated by the Department of Consumer Affairs. See Section 1.4 for additional scope provisions.*

4. *Energy efficiency standards regulated by the California Energy Commission. See Section 1.5 for additional scope provisions.*

5. *Dairies and places of meat inspection regulated by the Department of Food and Agriculture. See Section 1.6 for additional scope provisions.*

6. *Organized camps, laboratory animal quarters, public swimming pools, radiation protection, commissaries serving mobile food preparation vehicles and wild animal quarantine facilities regulated by the Department of Public Health. See Section 1.7 for additional scope provisions.*

7. *Hotels, motels, lodging houses, apartment houses, dwellings, dormitories, condominiums, shelters for homeless persons, congregate residences, employee housing, factory-built housing and other types of dwellings containing sleeping accommodations with or without common toilets or cooking facilities. See Section 1.8.2.1.1 for additional scope provisions.*

8. *Accommodations for persons with disabilities in buildings containing newly constructed covered multifamily dwellings, new common use spaces serving existing covered multifamily dwellings, additions to existing buildings where the addition alone meets the definition of "COVERED MULTIFAMILY DWELLINGS," and common-use spaces serving covered multifamily dwellings which are regulated by the Department of Housing and Community Development. See Section 1.8.2.1.2 for additional scope provisions.*

9. *Permanent buildings and permanent accessory buildings or structures constructed within mobile home parks and special occupancy parks regulated by the Department of Housing and Community Development. See Section 1.8.2.1.3 for additional scope provisions.*

10. *Accommodations for persons with disabilities regulated by the Division of the State Architect. See Section 1.9.1 for additional scope provisions.*

11. *Public elementary and secondary schools, community college buildings and state-owned or state-leased essential service buildings regulated by the Division of the State Architect. See Section 1.9.2 for additional scope provisions.*

12. *Qualified historical buildings and structures and their associated sites regulated by the State Historical Building Safety Board with the Division of the State Architect. See Section 1.9.3 for additional scope provisions.*

13. *General acute care hospitals, acute psychiatric hospitals, skilled nursing and/or intermediate care facilities, clinics licensed by the Department of Public Health and correctional treatment centers regulated by the Office of Statewide Health Planning and Development. See Section 1.10 for additional scope provisions.*

14. *Applications regulated by the Office of State Fire Marshal include but are not limited to the following in accordance with Section 1.11.*

    14.1. Buildings or structures used or intended for use as an:

    1. *Asylum, jail, prison*
    2. *Mental hospital, hospital, home for the elderly, children's nursery, children's home or institution, school or any similar occupancy of any capacity*
    3. *Theater, dancehall, skating rink, auditorium, assembly hall, meeting hall, nightclub, fair building or similar place of assemblage where 50 or more persons may gather together in a building, room or structure for the purpose of amusement, entertainment, instruction, deliberation, worship, drinking or dining, awaiting transportation, or education*
    4. *Small family day care homes, large family day-care homes, residential facilities and residential facilities for the elderly, residential care facilities*
    5. *State institutions or other state-owned or state-occupied buildings*
    6. *High rise structures*
    7. *Motion picture production studios*
    8. *Organized camps*
    9. *Residential structures*

    14.2. Tents, awnings or other fabric enclosures used in connection with any occupancy

    14.3. Fire alarm devices, equipment and systems in connection with any occupancy

    14.4. Hazardous materials, flammable and combustible liquids

    14.5. Public school automatic fire detection, alarm, and sprinkler systems

    14.6. Wildland-urban interface fire areas

15. *Public libraries constructed and renovated using funds from the California Library Construction and Renovation Bond Act of 1988 and regulated by the State Librarian. See Section 1.12 for additional scope provisions.*

16. *Graywater systems regulated by the Department of Water Resources. See Section 1.13 for additional scope provisions.*

17. *For applications listed in Section 1.9.1 regulated by the Division of the State Architect – Access Compliance, outdoor environments and uses shall be classified according to accessibility uses described in Chapters 11B.*

18. *Marine Oil Terminals regulated by the California State Lands Commission. See Section 1.14 for additional scope provisions.*

1.1.4 Appendices. *Provisions contained in the appendices of this code shall not apply unless specifically adopted by a state agency or adopted by a local enforcing agency in compliance with Health and Safety Code Section 18901 et. seq. for Building Standards Law, Health and Safety Code Section 17950 for State Housing Law and Health and Safety Code Section 13869.7 for Fire Protection Districts. See Section 1.1.8 of this code.*

1.1.5 Referenced codes. *The codes, standards and publications adopted and set forth in this code, including other codes, standards and publications referred to therein are, by title and date of publication, hereby adopted as standard reference documents of this code. When this code does not specifically cover any subject related to building design and construction, recognized architectural or engineering practices shall be employed. The National Fire Codes, standards, and the Fire Protection Handbook of the National Fire Protection Association are permitted to be used as authoritative guides in determining recognized fire prevention engineering practices.*

1.1.6 Nonbuilding standards, orders and regulations. *Requirements contained in the International Building Code, or in any other referenced standard, code or document, which are not building standards as defined in Health and Safety Code Section 18909, shall not be construed as part of the provisions of this code. For nonbuilding standards, orders, and regulations, see other titles of the California Code of Regulations.*

1.1.7 Order of precedence and use.

1.1.7.1 Differences. *In the event of any differences between these building standards and the standard reference documents, the text of these building standards shall govern.*

1.1.7.2 Specific provisions. *Where a specific provision varies from a general provision, the specific provision shall apply.*

1.1.7.3 Conflicts. *When the requirements of this code conflict with the requirements of any other part of the California Building Standards Code, Title 24, the most restrictive requirements shall prevail.*

1.1.8 City, county, or city and county amendments, additions or deletions. *The provisions of this code do not limit the authority of city, county, or city and county governments to establish more restrictive and reasonably necessary differences to the provisions contained in this code pursuant to complying with Section 1.1.8.1. The effective date of amendments, additions or deletions to this code by a city, county, or a city and county filed pursuant to Section 1.1.8.1 shall be the date filed. However, in no case shall the amendments, additions or deletions to this code be effective any sooner than the effective date of this code.*

Local modifications shall comply with Health and Safety Code Section 18941.5 for Building Standards Law, Health and Safety Code Section 17958 for State Housing Law or Health and Safety Code Section 13869.7 for Fire Protection Districts.

1.1.8.1 Findings and filings.

1. *The city, county, or city and county shall make express findings for each amendment, addition or deletion based upon climatic, topographical or geological conditions.*

   Exception: *Hazardous building ordinances and programs mitigating unreinforced masonry buildings.*

2. *The city, county, or city and county shall file the amendments, additions or deletions expressly marked and identified as to the applicable findings. Cities, counties, cities and counties, and fire departments shall file the amendments, additions or deletions, and the findings with the California Building Standards Commission at 2525 Natomas Park Drive, Suite 130, Sacramento, CA 95833.*

3. *Findings prepared by fire protection districts shall be ratified by the local city, county, or city and county and filed with the California Department of Housing and Community Development, Division of Codes and Standards, P.O. Box 1407, Sacramento, CA 95812-1407 or 1800 3rd Street, Room 260, Sacramento, CA 95811.*

1.1.9 Effective date of this code. *Only those standards approved by the California Building Standards*

Commission that are effective at the time an application for building permit is submitted shall apply to the plans and specifications for, and to the construction performed under, that permit. For the effective dates of the provisions contained in this code, see the History Note page of this code.

1.1.10 Availability of codes. *At least one complete copy each of Titles 8, 19, 20, 24, and 25 with all revisions shall be maintained in the office of the building official responsible for the administration and enforcement of this code. Each state department concerned and each city, county or city and county shall have an up-to-date copy of the code available for public inspection. See Health and Safety Code Section 18942(d)(1) and (2).*

1.1.11 Format. *This part fundamentally adopts the International Building Code by reference on a chapter-by-chapter basis. When a specific chapter of the International Building Code is not printed in the code and is marked "Reserved" such chapter of the International Building Code is not adopted as a portion of this code. When a specific chapter of the International Building Code is marked "Not adopted by the State of California" but appears in the code, it may be available for adoption by local ordinance.*

> ***Note:*** *Matrix Adoption Tables at the front of each chapter may aid the code user in determining which chapter or sections within a chapter are applicable to buildings under the authority of a specific state agency, but they are not to be considered regulatory.*

1.1.12 Validity. *If any chapter, section, subsection, sentence, clause or phrase of this code is for any reason held to be unconstitutional, contrary to statute, exceeding the authority of the state as stipulated by statutes or otherwise inoperative, such decision shall not affect the validity of the remaining portion of this code.*

SECTION 1.2
BUILDING STANDARDS COMMISSION

1.2.2 Alternative materials, design and methods of construction and equipment. *The provisions of this code are not intended to prevent the installation of any material or to prohibit any design or method of construction not specifically prescribed by this code, provided that any such alternative has been approved. An alternative material, design or method of construction shall be approved where the building official finds that the proposed design is satisfactory and complies with the intent of the provisions of this code, and that the material, method or work offered is, for the purpose intended, at least the equivalent of that prescribed in this code in quality, strength, effectiveness, fire resistance, durability and safety.*

SECTION 1.9
DIVISION OF THE STATE ARCHITECT

1.9.1 Division of the State Architect — Access Compliance.

General. *The purpose of this code is to ensure that barrier-free design is incorporated in all buildings, facilities, site work and other improvements to which this code applies in compliance with state law to ensure that these improvements are accessible to and usable by persons with disabilities. Additions, alterations and structural repairs in all buildings and facilities shall comply with these provisions for new buildings, except as otherwise provided and specified herein.*

The provisions of these regulations shall apply to any portable buildings leased or owned by a school district, and shall also apply to temporary and emergency buildings and facilities. Temporary buildings and facilities are not of permanent construction but are extensively used or are essential for public use for a period of time. Examples of temporary buildings or facilities covered include, but are not limited to: reviewing stands, temporary classrooms, bleacher areas, exhibit areas, temporary banking facilities, temporary health screening services or temporary safe pedestrian passageways around a construction site.

DSA

Advisory 1.9.1 General. Temporary facilities and emergency construction are both required to comply with the CBC regulations for accessibility. See CA Gov. Code §4451(e). ■

In addition, to incorporate standards at least as restrictive as those required by the federal government for barrier-free design under (1) Title III (Public Accommodations and Commercial Facilities), Subpart D (New Construction and Alteration) (see 28 C.F.R., Part 36), and (2) Title II (Public Entities), Section 35.151 (New Construction and Alterations) (see 28 C.F.R., Part 35) both from the Americans with Disabilities Act of 1990, 2004 Americans with Disabilities Act Accessibility Guidelines, as adopted by the US Department of Justice (see 36 C.F.R. Part 1191, Appendices B and D), and (3) under the Fair Housing Amendments Act of 1988. Some of these regulations may be more stringent than state law in order to meet the federal requirement.

1.9.1.1 Application. *See Government Code commencing with Section 4450.*

Publicly funded buildings, structures, sidewalks, curbs and related facilities shall be accessible to and usable by persons with disabilities as follows:

DSA

Advisory 1.9.1.1 Application. Not only does publicly funded mean state funds, but it also means county funds, municipal funds or the funds of any political subdivision of the state. When public funds are provided by other sources and transferred to a state, county, municipality or other political subdivision of the state, the entity that collects and controls the distribution of the public funds becomes the funding source, and subject to the requirements of this section. ■

1.9.1.1.1 *All buildings, structures, sidewalks, curbs and related facilities constructed in the state by the use of state, county or municipal funds, or the funds of any political subdivision of the state.*

1.9.1.1.2 *All buildings, structures and facilities that are leased, rented, contracted, sublet or hired by any municipal, county or state division of government, or by a special district.*

DSA

Advisory 1.9.1.1.2. Leases per se, unless alterations occur, do not directly "trigger" construction code requirements. The lessee of public accommodations should be aware that readily achievable barrier removal is an ongoing obligation under the ADA and may require physical alterations to the building or facility in compliance with the accessibility provisions in the building code. For public entities, leasing should be focused on selecting accessible sites, buildings and facilities. The Department of General Services requires newly leased facilities, and lease renewals, to be accessible by first surveying the facility for code compliance and then making necessary corrections where public programs are provided and in employee common-use areas, restrooms, break rooms, parking, etc. ■

1.9.1.1.3 *All publicly funded buildings used for congregate residences or for one- or two-family dwelling unit purposes shall conform to the provisions applicable to living accommodations.*

1.9.1.1.4 *All existing publicly funded buildings and facilities when alterations, structural repairs or additions are made to such buildings or facilities. For detailed requirements on existing buildings, see Chapter 11B, Division 2, Section 11B-202.*

1.9.1.1.5 *With respect to buildings, structures, sidewalks, curbs and related facilities not requiring a building permit, building standards published in the California Building Standards Code relating to access for persons with disabilities and other regulations adopted pursuant to Government Code Section 4450, and in effect at the time construction is commenced, shall be applicable.*

DSA

Advisory 1.9.1.1.5. Some construction such as parking lot resurfacing, re-striping parking stalls, sidewalk repair and cabinet installations do not always require building permits. In such cases, the code in place on the date of any construction would be the effective code for such work. ■

1.9.1.2 Application. *See Health and Safety Code commencing with Section 19952.*

All privately funded public accommodations, as defined and commercial facilities, as defined, shall be accessible to persons with disabilities as follows:

Exception: *Certain types of privately funded multistory buildings do not require installation of an elevator to provide access above and below the first floor. See Chapter 11B.*

1.9.1.2.1 *Any building, structure, facility, complex or improved area, or portions thereof, which are used by the general public.*

DSA

Advisory 1.9.1.2.1. The term "used by the general public" is frequently misinterpreted to mean only facilities which are publicly owned. However, the term actually means facilities made available to the public, and often includes privately owned buildings and facilities. ■

1.9.1.2.2 *Any sanitary facilities which are made available for the public, clients or employees in such accommodations or facilities.*

1.9.1.2.3 *Any curb or sidewalk intended for public use that is constructed in this state with private funds.*

1.9.1.2.4 *All existing privately funded public accommodations when alterations, structural repairs or additions are made to such public accommodations as set forth under Chapter 11B.*

1.9.1.3 Application — public housing and private housing available for public use. *See Government Code Sections 4450 and 12955.1(c).*

1.9.1.4 Enforcing agency.

DSA

Advisory 1.9.1.4 Enforcing agency. State and local enforcement levels of government could have overlapping jurisdiction under Title 24. For accessibility, in State-funded tenant improvements to State-leased facilities, the local jurisdiction must be aware of DGS' jurisdictional authority and DSA's jurisdictional approvals necessary for State-funded construction. See commentary, Section 1.9.1.4.1. ■

1.9.1.4.1 *The director of the Department of General Services where state funds are utilized for any project or where funds of counties, municipalities or other political subdivisions are utilized*

for the construction of elementary, secondary or community college projects.

DSA

Advisory 1.9.1.4.1. CA Gov. Code §4453(a) vests enforcement authority to the Director of the Department of General Services (generally delegated to the Division of the State Architect) where state funds are utilized for any project or where funds of counties, municipalities, or other political subdivisions are utilized for the construction of elementary, secondary, or community college projects. ■

1.9.1.4.2 *The governing bodies where funds of counties, municipalities or other political subdivisions are utilized except as otherwise provided above.*

DSA

Advisory 1.9.1.4.2. CA Gov. Code §4453(b) vests enforcement authority to the governing bodies thereof when funds of counties, municipalities or other political subdivisions are utilized. ■

1.9.1.4.3 *The building department of every city, county, or city and county within the territorial area of its city, county, or city and county, where private funds are utilized. "Building department" means the department, bureau or officer charged with the enforcement of laws or ordinances regulating the erection or construction, or both the erection and construction, of buildings.*

1.9.1.5 Special conditions for persons with disabilities requiring appeals action ratification. *Whenever reference is made in these regulations to this section, the findings and determinations required to be rendered by the local enforcing agency shall be subject to ratification through an appeals process.*

DSA

Advisory 1.9.1.5 Special conditions for persons with disabilities requiring appeals action ratification. California statutes and the California Building Standards Commission regulations allow Equivalent Facilitation for public accommodations or facilities built with private funds whenever a determination of Unreasonable Hardship is granted by the local enforcing agency or building department. (Reference CA H&S C. §19957)

When buildings and facilities are constructed with state, county or municipal funds, or the funds of any political subdivision of the state, administrative authorities may grant exceptions from the literal requirements of the building standards only when it is clearly evident that equivalent facilitation and protection that meets or exceeds the requirements under federal law are secured. (Reference CA Gov. C. §4451(f))

California Health and Safety Code §19957.5 provides that every city, county, or city and county may appoint a local appeals board to hear written appeals regarding the action taken by the building department. ■

1.9.1.6 Authority cited. *Government Code Section 4450.*

1.9.1.7 Reference cited. *Government Code Sections 4450 through 4461, 12955.1(c) and Health and Safety Code Sections 18949.1, 19952 through 19959.*

1.9.1.8 Adopting agency identification. *The provision of this code applicable to buildings identified in this Subsection 1.9.1 will be identified in the Matrix Adoption Tables under the acronym DSA-AC.*

CHAPTER 1
SCOPE AND ADMINISTRATION
DIVISION II
SCOPE AND ADMINISTRATION

PART 1—SCOPE AND APPLICATION

SECTION 101
GENERAL

101.1 Title. These regulations shall be known as the Building Code of **[NAME OF JURISDICTION]**, hereinafter referred to as "this code."

101.2 Scope. The provisions of this code shall apply to the construction, alteration, relocation, enlargement, replacement, repair, equipment, use and occupancy, location, maintenance, removal and demolition of every building or structure or any appurtenances connected or attached to such buildings or structures.

Exception: Detached one- and two-family dwellings and multiple single-family dwellings (townhouses) not more than three stories above grade plane in height with a separate means of egress and their accessory structures shall comply with the *California* Residential Code.

101.2.1 Appendices. Provisions in the appendices shall not apply unless specifically adopted.

101.3 Intent. The purpose of this code is to establish the minimum requirements to safeguard the public health, safety and general welfare through structural strength, means of egress facilities, stability, sanitation, adequate light and ventilation, energy conservation, and safety to life and property from fire and other hazards attributed to the built environment and to provide safety to fire fighters and emergency responders during emergency operations.

101.4 Referenced codes. The other codes listed in Sections 101.4.1 through 101.4.6 and referenced elsewhere in this code shall be considered part of the requirements of this code to the prescribed extent of each such reference.

101.4.1 Gas. The provisions of the *California Mechanical Code* shall apply to the installation of gas piping from the point of delivery, gas appliances and related accessories as covered in this code. These requirements apply to gas piping systems extending from the point of delivery to the inlet connections of appliances and the installation and operation of residential and commercial gas appliances and related accessories.

101.4.2 Mechanical. The provisions of the *California* Mechanical Code shall apply to the installation, alterations, repairs and replacement of mechanical systems, including equipment, appliances, fixtures, fittings and/or appurtenances, including ventilating, heating, cooling, air-conditioning and refrigeration systems, incinerators and other energy-related systems.

101.4.3 Plumbing. The provisions of the *California* Plumbing Code shall apply to the installation, alteration, repair and replacement of plumbing systems, including equipment, appliances, fixtures, fittings and appurtenances, and where connected to a water or sewage system and all aspects of a medical gas system. The provisions of the International Private Sewage Disposal Code shall apply to private sewage disposal systems.

101.4.4 Property maintenance. The provisions of the International Property Maintenance Code shall apply to existing structures and premises; equipment and facilities; light, ventilation, space heating, sanitation, life and fire safety hazards; responsibilities of owners, operators and occupants; and occupancy of existing premises and structures.

101.4.5 Fire prevention. The provisions of the *California* Fire Code shall apply to matters affecting or relating to structures, processes and premises from the hazard of fire and explosion arising from the storage, handling or use of structures, materials or devices; from conditions hazardous to life, property or public welfare in the occupancy of structures or premises; and from the construction, extension, repair, alteration or removal of fire suppression, automatic sprinkler systems and alarm systems or fire hazards in the structure or on the premises from occupancy or operation.

101.4.6 Energy. The provisions of the *California* Energy Conservation Code shall apply to all matters governing the design and construction of buildings for energy efficiency.

SECTION 104
DUTIES AND POWERS OF BUILDING OFFICIAL

104.11 Alternative materials, design and methods of construction and equipment. The provisions of this code are not intended to prevent the installation of any material or to prohibit any design or method of construction not specifically prescribed by this code, provided that any such alternative has been approved. An alternative material, design or method of construction shall be approved where the building official finds that the proposed design is satisfactory and complies with the intent of the provisions of this code, and that the material, method or work offered is, for the purpose intended, at least the equivalent of that prescribed in this code in quality, strength, effectiveness, fire resistance, durability and safety.

SECTION 111
CERTIFICATE OF OCCUPANCY

111.2 Certificate issued. After the building official inspects the building or structure and does not find violations of the provisions of this code or other laws that are enforced by the department of building safety, the building official shall issue a certificate of occupancy that contains the following:

1. The building permit number.
2. The address of the structure.
3. The name and address of the owner.
4. A description of that portion of the structure for which the certificate is issued.
5. A statement that the described portion of the structure has been inspected for compliance with the requirements of this code for the occupancy and division of occupancy and the use for which the proposed occupancy is classified.
6. The name of the building official.
7. The edition of the code under which the permit was issued.
8. The use and occupancy, in accordance with the provisions of Chapter 3.
9. The type of construction as defined in Chapter 6.
10. The design occupant load.
11. If an automatic sprinkler system is provided, whether the sprinkler system is required.
12. Any special stipulations and conditions of the building permit.

CHAPTER 2 – MATRIX ADOPTION TABLE

Adopting Agency		DSA	
		AC	SS
Adopt entire California Chapter			
Adopt entire California Chapter as amended (amended sections listed below)			
Adopt only those sections that are listed below		X	
Chapter / Section	Codes		
202 Access aisle		X	
202 Accessibility		X	
202 Accessibility Function Button		X	
202 Accessible		X	
202 Accessible element		X	
202 Accessible means of egress		X	
202 Accessible route		X	
202 Accessible space		X	
202 Adaptable		X	
202 Addition		X	
202 Administrative authority		X	
202 Aisle		X	
202 Alteration		X	
202 Amusement attraction		X	
202 Amusement ride		X	
202 Amusement ride seat		X	
202 ANSI		X	
202 Approved w/o Notes		X	
202 Approved testing agency		X	
202 Area of refuge		X	
202 Area of sport activity		X	
202 Assembly area		X	
202 Assistive listening system (ALS)		X	
202 Automatic door		X	
202 Automatic Teller Machine (ATM)		X	
202 Bathroom		X	
202 Blended Transition		X	
202 Boarding pier		X	
202 Boat launch ramp		X	
202 Boat slip		X	
202 Building		X	
202 Building official		X	
202 Catch pool		X	
202 CCR		X	
202 Characters		X	
202 Children's use		X	
202 Circulation path		X	
202 Clear		X	
202 Clear floor space		X	
202 Closed-circuit telephone		X	
202 Commercial facilities		X	
202 Common use		X	

202 Comply with		X	
202 Cross slope		X	
202 Curb cut		X	
202 Curb ramp		X	
202 Designated public transportation		X	
202 Destination-oriented elevator		X	
202 Detectable warning		X	
202 Directional sign		X	
202 Disability		X	
202 Dormitory		X	
202 Element		X	
202 Elevated play component		X	
202 Elevator, passenger		X	
202 Employee work area		X	
202 Enforcing agency		X	
202 Entrance		X	
202 Equivalent facilitation		X	
202 Existing building or facility		X	
202 Exit		X	
202 Facility		X	
202 Functional area		X	
202 Gangway		X	
202 Golf car passage		X	
202 Grab bar		X	
202 Grade (adjacent ground elevation)		X	
202 Grade Break		X	
202 Ground floor		X	
202 Ground level play component		X	
202 Guard (or guardrail)		X	
202 Hall call console		X	
202 Handrail		X	
202 Health care provider		X	
202 Historic Buildings		X	
202 Housing at a place of education		X	
202 If, If . . . Then		X	
202 International Symbol of Accessibility		X	
202 Key station		X	
202 Kick plate		X	
202 Kitchen or kitchenette		X	
202 Lavatory		X	
202 Mail boxes		X	
202 Marked crossing		X	
202 May		X	
202 Mezzanine		X	
202 Multi-bedroom housing unit		X	
202 NFPA		X	
202 Nosing		X	
202 Occupant load		X	
202 Occupiable space		X	
202 Open riser		X	
202 Operable part		X	
202 Passenger elevator		X	
202 Path of travel		X	
202 Pedestrian		X	
202 Pedestrian way		X	
202 Permanent		X	
202 Permit		X	
202 Pictogram		X	
202 Place of public accommodation		X	

202 Platform		X	
202 Platform (wheelchair) lift		X	
202 Play area		X	
202 Play component		X	
202 Point-of-Sale Device		X	
202 Powder room		X	
202 Power-assisted door		X	
202 Private building or facility		X	
202 Professional office of a health care provider		X	
202 Public building or facility		X	
202 Public entity		X	
202 Public entrance		X	
202 Public housing		X	
202 Public use		X	
202 Public-use areas		X	
202 Public way		X	
202 Qualified historic building or facility		X	
202 Ramp		X	
202 Reasonable portion		X	
202 Recommend		X	
202 Remodeling		X	
202 Repair		X	
202 Residential dwelling unit		X	
202 Restricted entrance		X	
202 Riser		X	
202 Running slope		X	
202 Self-service storage		X	
202 Service entrance		X	
202 Shall		X	
202 Shopping center (or shopping mall)		X	
202 Should		X	
202 Sidewalk		X	
202 Signage		X	
202 Sink		X	
202 Site		X	
202 Sleeping accommodations		X	
202 Soft contained play structure		X	
202 Space		X	
202 Specified public transportation		X	
202 Stage		X	
202 Stair		X	
202 Stairway		X	
202 Story		X	
202 Structural frame		X	
202 Structurally impracticable		X	
202 Structure		X	
202 Tactile		X	
202 Tactile Sign		X	
202 Technically infeasible		X	
202 Teeing ground		X	
202 Temporary		X	
202 Text telephone		X	
202 Transfer device		X	
202 Transient lodging		X	
202 Transit boarding platform		X	
202 Transition plate		X	
202 Tread		X	
202 TTY		X	
202 Unreasonable hardship		X	

202 Use zone		X	
202 Valuation threshold		X	
202 Variable message signs (VMS)		X	
202 Variable message signs (VMS) characters		X	
202 Vehicular way		X	
202 Walk		X	
202 Wet bar		X	
202 Wheelchair		X	
202 Wheelchair space		X	
202 Work area equipment		X	
202 Workstation		X	

SECTION 202
DEFINITIONS

ACCESS AISLE. [DSA-AC] *An accessible pedestrian space adjacent to or between parking spaces that provides clearances in compliance with this code.*

ACCESSIBILITY. [DSA-AC] *Accessibility is the combination of various elements in a building, facility, site, or area, or portion thereof which allows access, circulation and the full use of the building and facilities by persons with disabilities in compliance with this code.*

ACCESSIBILITY FUNCTION BUTTON. [DSA-AC] *A button on an elevator hall call console in a destination-oriented elevator system that when pressed will activate a series of visual and verbal prompts and announcements providing instruction regarding hall call console operation and direction to an assigned elevator.*

ACCESSIBLE. [DSA-AC] *A site, building, facility, or portion thereof that is approachable and usable by persons with disabilities in compliance with this code.*

ACCESSIBLE ELEMENT. [DSA-AC] *An element specified by the regulations adopted by the Division of the State Architect-Access Compliance.*

DSA

Advisory Definition of ACCESSIBLE ELEMENT. An *ACCESSIBLE ELEMENT* can include a room, area, route, feature or device which provides accessibility for persons with disabilities. ■

ACCESSIBLE MEANS OF EGRESS. A continuous and unobstructed way of egress travel from any accessible point in a building or facility to a public way.

ACCESSIBLE ROUTE. [DSA-AC] *A continuous unobstructed path connecting accessible elements and spaces of an accessible site, building or facility that can be negotiated by a person with a disability using a wheelchair, and that is also safe for and usable by persons with other disabilities. Interior accessible routes may include corridors, hallways, floors, ramps, elevators and lifts. Exterior accessible routes may include parking access aisles, curb ramps, crosswalks at vehicular ways, walks, ramps and lifts.*

ACCESSIBLE SPACE. [DSA-AC] *A space that complies with the accessibility provisions of this code.*

ADAPTABLE. [DSA-AC] *Capable of being readily modified and made accessible.*

DSA

Advisory Definition of ADAPTABLE. This term means that elements can be modified or adjusted to accommodate the needs of a specific user. As part of the initial design and construction, for example, structural backing would be provided for the later installation of grab bars, base cabinets under kitchen sinks would be removable without the use of specialized tools or specialized knowledge, or countertops would be repositionable. ■

ADDITION. …
[DSA-AC] *An expansion, extension or increase in the gross floor area or height of a building or facility.*

ADMINISTRATIVE AUTHORITY. [DSA-AC] *A governmental agency that adopts or enforces regulations and guidelines for the design, construction or alteration of buildings and facilities.*

AISLE. …
[DSA-AC] *A circulation path between objects such as seats, tables, merchandise, equipment, displays, shelves, desks, etc., that provides clearances in compliance with this code.*

ALTERATION. …
[DSA-AC] *A change, addition or modification in construction, change in occupancy or use, or structural repair to an existing building or facility. Alterations include, but are not limited to, remodeling, renovation, rehabilitation, reconstruction, historic restoration, resurfacing of circulation paths or vehicular ways, changes or rearrangement of the structural parts or elements, and changes or rearrangement in the plan configuration of walls and full-height partitions. Normal maintenance, reroofing, painting or wallpapering, or changes to mechanical and electrical systems are not alterations unless they affect the usability of the building or facility.*

AMUSEMENT ATTRACTION. [DSA-AC] *Any facility, or portion of a facility, located within an amusement park or theme park which provides amusement without the use of an amusement device. Amusement attractions include, but are not limited to, fun houses, barrels and other attractions without seats.*

AMUSEMENT RIDE. [DSA-AC] *A system that moves persons through a fixed course within a defined area for the purpose of amusement.*

AMUSEMENT RIDE SEAT. [DSA-AC] *A seat that is built-in or mechanically fastened to an amusement ride intended to be occupied by one or more passengers.*

ANSI. [DSA-AC] *The American National Standards Institute.*

APPROVED. …
[DSA-AC] *"Approved" means meeting the approval of the enforcing agency, except as otherwise provided by law, when used in connection with any system, material, type of construction, fixture or appliance as the result of investigations and tests conducted by the agency, or by reason of accepted principles or tests by national authorities or technical, health or scientific organizations or agencies.*

APPROVED TESTING AGENCY. [DSA-AC] *Any agency, which is determined by the enforcing agency, except as otherwise provided by law, to have adequate personnel and expertise to carry out the testing of systems, materials, type of construction, fixtures or appliances.*

AREA OF REFUGE. An area where persons unable to use stairways can remain temporarily to await instructions or assistance during emergency evacuation.

AREA OF SPORT ACTIVITY. [DSA-AC] *That portion of a room or space where the play or practice of a sport occurs.*

ASSEMBLY AREA. [DSA-AC] *A building or facility, or portion thereof, used for the purpose of entertainment, educational or civic gatherings, or similar purposes. For the purposes of these requirements, assembly areas include, but are not limited to, classrooms, lecture halls, courtrooms, public*

meeting rooms, public hearing rooms, legislative chambers, motion picture houses, auditoria, theaters, playhouses, dinner theaters, concert halls, centers for the performing arts, amphitheaters, arenas, stadiums, grandstands or convention centers.

DSA

Advisory Definition of ASSEMBLY AREA. The application of the accessibility provisions of this code is based upon the use of the space rather than the occupancy classification. For example, an assembly area may or may not be a Group A Occupancy. A large conference room in a Group B Occupancy or a multi-purpose area in a Group E Occupancy may be an assembly area. ■

ASSISTIVE LISTENING SYSTEM (ALS). [DSA-AC] *An amplification system utilizing transmitters, receivers and coupling devices to bypass the acoustical space between a sound source and a listener by means of induction loop, radio frequency, infrared or direct-wired equipment.*

AUTOMATIC DOOR. *A door equipped with a power-operated mechanism and controls that open and close the door automatically upon receipt of a momentary actuating signal. The switch that begins the automatic cycle may be a photoelectric device, floor mat or manual switch.*

AUTOMATIC TELLER MACHINE (ATM). [DSA-AC] *Any electronic information processing device that accepts or dispenses cash in connection with a credit, deposit or convenience account. The term does not include devices used solely to facilitate check guarantees or check authorizations, or which are used in connection with the acceptance or dispensing of cash on a person-to-person basis, such as by a store cashier.*

BATHROOM. *For the purposes of Chapters 11A and 11B, a room which includes a water closet (toilet), a lavatory, and a bathtub and/or a shower. It does not include single-fixture facilities or those with only a water closet and lavatory. It does include a compartmented bathroom. A compartmented bathroom is one in which the fixtures are distributed among interconnected rooms. A compartmented bathroom is considered a single unit and is subject to the requirements of Chapters 11A and 11B.*

BLENDED TRANSITION. [DSA-AC] *A raised pedestrian street crossing, depressed corner or similar connection between the pedestrian access route at the level of the sidewalk and the level of the pedestrian street crossing that has a grade of 5 percent or less.*

BOARDING PIER. [DSA-AC] *A portion of a pier where a boat is temporarily secured for the purpose of embarking or disembarking.*

BOAT LAUNCH RAMP. [DSA-AC] *A sloped surface designed for launching and retrieving trailered boats and other water craft to and from a body of water.*

BOAT SLIP. [DSA-AC] *That portion of a pier, main pier, finger pier, or float where a boat is moored for the purpose of berthing, embarking, or disembarking.*

BUILDING. Any structure used or intended for supporting or sheltering any use or occupancy.

DSA

Advisory Definition of BUILDING. The accessibility standards generally apply to buildings and facilities. Parking lots, play areas, patios, constructed trails, man-made outdoor areas are often not considered to be buildings. Rather, these elements are generally considered to be facilities. See the definition of *FACILITY*. ■

BUILDING OFFICIAL. The officer or other designated authority charged with the administration and

enforcement of this code, or a duly authorized representative.

CATCH POOL. [DSA-AC] *A pool or designated section of a pool used as a terminus for water slide flumes.*

CCR. [DSA-AC] *The California Code of Regulations.*

CHARACTERS. [DSA-AC] *Letters, numbers, punctuation marks and typographic symbols.*

CHILDREN'S USE. [DSA-AC] *Describes spaces and elements specifically designed for use primarily by people 12 years old and younger.*

CIRCULATION PATH. …
[DSA-AC] *An exterior or interior way of passage provided for pedestrian travel, including but not limited to, walks, hallways, courtyards, elevators, platform lifts, ramps, stairways and landings.*

DSA

Advisory Definition of CIRCULATION PATH. A *CIRCULATION PATH* is a pedestrian route provided within a building, facility or site and may or may not (in the case of stairs) include an accessible route of travel. Whenever the accessible route diverges from the regular circulation path signage may be required to identify the departure from the regular route if not obvious. ■

CLEAR. [DSA-AC] *Unobstructed.*

CLEAR FLOOR SPACE. [DSA-AC] *The minimum unobstructed floor or ground space required to accommodate a single, stationary wheelchair and occupant.*

CLOSED-CIRCUIT TELEPHONE. [DSA-AC] *A telephone with a dedicated line such as a house phone, courtesy phone or phone that must be used to gain entry to a facility.*

COMMERCIAL FACILITIES. [DSA-AC] *Facilities whose operations will affect commerce and are intended for non-residential use by a private entity. Commercial facilities shall not include (1) facilities that are covered or expressly exempted from coverage under the Fair Housing Act of 1968, as amended (42 U.S.C. 3601 - 3631); (2) aircraft; or (3) railroad locomotives, railroad freight cars, railroad cabooses, commuter or intercity passenger rail cars (including coaches, dining cars, sleeping cars, lounge cars, and food service cars), any other railroad cars described in Section 242 of the Americans With Disabilities Act or covered under Title II of the Americans With Disabilities Act, or railroad rights-of-way. For purposes of this definition, "rail" and "railroad" have the meaning given the term "railroad" in Section 202(e) of the Federal Railroad Safety Act of 1970 (45 U.S.C. 431(e)).*

COMMON USE. *Interior or exterior circulation paths, rooms, spaces or elements that are not for public use and are made available for the shared use of two or more people.*

DSA

Advisory Definition of COMMON USE. Employees, tenants or staff and their guests may jointly utilize common use areas where the public is not permitted general access. An example of a common use area would be a laundry room or community room within a homeless shelter. Examples of common use areas within an office building may include a break room, employee lounge, employee exercise facility or employee locker room. ■

COMPLY WITH. [DSA-AC] *Comply with means to meet one or more provisions of this code.*

CROSS SLOPE. *The slope that is perpendicular to the direction of travel.*

CURB CUT. *An interruption of a curb at a pedestrian way, which separates surfaces that are substantially at the same elevation.*

CURB RAMP. *A sloping pedestrian way, intended for pedestrian traffic, which provides access between a walk or sidewalk and a surface located above or below an adjacent curb face.*

DESIGNATED PUBLIC TRANSPORTATION. [DSA-AC] *Transportation provided by a public entity (other than public school transportation) by bus, rail, or other conveyance (other than transportation by aircraft or intercity or commuter rail transportation) that provides the general public with general or special service, including charter service, on a regular and continuing basis.*

DESTINATION-ORIENTED ELEVATOR. [DSA-AC] *Destination-oriented elevators are operated by the user selecting a destination floor at a hall call console located at or near an elevator landing. The destination-oriented elevator system then assigns an elevator car which transports the user to the selected destination floor. Destination-oriented elevators do not provide floor selection within elevator cars.*

DETECTABLE WARNING. *A standardized surface feature built in or applied to walking surfaces or other elements to warn of hazards on a circulation path.*

> **DSA**
>
> **Advisory Definition of DETECTABLE WARNING.** Curbs can be used by pedestrians with vision impairments to detect the boundary between a sidewalk and a vehicular way. Curb ramps remove the needed cues for persons with visual impairments; detectable warnings have been developed as a replacement cue and warning to indicate the presence of a vehicular way. ■

DIRECTIONAL SIGN. [DSA-AC] *A publicly displayed notice which indicates by use of words or symbols a recommended direction or route of travel.*

DISABILITY. [DSA-AC] *Disability is (1) a physical or mental impairment that limits one or more of the major life activities of an individual, (2) a record of such an impairment, or (3) being regarded as having such an impairment.*

> **DSA**
>
> **Advisory Definition of DISABILITY.** This is the definition of disability used and defined in the Americans with Disabilities Act of 1990. ■

DORMITORY. A space in a building where group sleeping accommodations are provided in one room, or in a series of closely associated rooms, for persons not members of the same family group, under joint occupancy and single management, as in college dormitories or fraternity houses.

ELEMENT. [DSA-AC] *An architectural or mechanical component of a building, facility, space or site.*

ELEVATED PLAY COMPONENT. [DSA-AC] *A play component that is approached above or below grade and that is part of a composite play structure consisting of two or more play components attached or functionally linked to create an integrated unit providing more than one play activity.*

ELEVATOR, PASSENGER. [DSA-AC] *An elevator used primarily to carry passengers.*

EMPLOYEE WORK AREA. All or any portion of a space used only by employees and used only for work. Corridors, toilet rooms, kitchenettes and break rooms are not employee work areas.

ENFORCING AGENCY. [DSA-AC] *Enforcing Agency is the designated department or agency as specified by statute or regulation.*

ENTRANCE. *Any access point to a building or portion of a building or facility used for the purpose of entering. An entrance includes the approach walk, the vertical access leading to the entrance platform, the entrance platform itself, vestibule if provided, the entry door or gate, and the hardware of the entry door or gate.*

EQUIVALENT FACILITATION. *The use of designs, products, or technologies as alternatives to those prescribed, resulting in substantially equivalent or greater accessibility and usability.*

> ***Note:*** *In determining equivalent facilitation, consideration shall be given to means that provide for the maximum independence of persons with disabilities while presenting the least risk of harm, injury or other hazard to such persons or others.*

EXISTING BUILDING OR FACILITY. [DSA-AC] *A facility in existence on any given date, without regard to whether the facility may also be considered newly constructed or altered under this code.*

EXIT. That portion of a means of egress system between the exit access and the exit discharge or public way. Exit components include exterior exit doors at the level of exit discharge, interior exit stairways, interior exit ramps, exit passageways, exterior exit stairways and exterior exit ramps and horizontal exits.

FACILITY*. …*
[DSA-AC] *All or any portion of buildings, structures, site improvements, elements, and pedestrian routes or vehicular ways located on a site.*

FUNCTIONAL AREA. [DSA-AC] *A room, space or area intended or designated for a group of related activities or processes.*

GANGWAY. [DSA-AC] *A variable-sloped pedestrian walkway that links a fixed structure or land with a floating structure. Gangways that connect to vessels are not addressed by this code.*

GOLF CAR PASSAGE. [DSA-AC] *A continuous passage on which a motorized golf car can operate.*

GRAB BAR. [DSA-AC] *A bar for the purpose of being grasped by the hand for support.*

> **DSA**
>
> **Advisory Definition of GRAB BAR.** A grab bar may also provide support for a user transferring from a wheelchair onto a bench, seat or plumbing fixture. ■

GRADE (Adjacent Ground Elevation). [DSA-AC] *The lowest point of elevation of the finished surface of the ground, paving or sidewalk within the area between the building and the property line or, when the property line is more than 5 feet (1524 mm) from the building, between the building and a line 5 feet (1524 mm) from the building. See Health and Safety Code Section 19955.3(d).*

GRADE BREAK. [DSA-AC] *The line where two surface planes with different slopes meet.*

GROUND FLOOR. [DSA-AC] *The floor of a building with a building entrance on an accessible route. A building may have one or more ground floors.*

GROUND LEVEL PLAY COMPONENT. [DSA-AC] *A play component that is approached and exited at the ground level.*

GUARD *[DSA-AC] OR GUARDRAIL*. A building component or a system of building components located

at or near the open sides of elevated walking surfaces that minimizes the possibility of a fall from the walking surface to a lower level.

HALL CALL CONSOLE. [DSA-AC] *An elevator call user interface exclusive to a destination-oriented elevator system that requires the user to select a destination floor prior to entering the elevator car.*

HANDRAIL. A horizontal or sloping rail intended for grasping by the hand for guidance or support.

HEALTH CARE PROVIDER. [DSA-AC] *See "Professional Office of a Health Care Provider"*

HISTORIC BUILDINGS. …
[DSA-AC] *See "Qualified historical building or property," C.C.R., Title 24, Part 8.*

HOUSING AT A PLACE OF EDUCATION. *Housing operated by or on behalf of an elementary, secondary, undergraduate, or postgraduate school, or other place of education, including dormitories, suites, apartments, or other places of residence.*

IF, IF . . . THEN. [DSA-AC] *The terms "if" and "if … then" denotes a specification that applies only when the conditions described are present.*

INTERNATIONAL SYMBOL OF ACCESSIBILITY. *The symbol adopted by Rehabilitation International's 11th World Congress for the purpose of indicating that buildings and facilities are accessible to persons with disabilities.*

DSA

Advisory Definition of INTERNATIONAL SYMBOL OF ACCESSIBILITY. This is also known as the "ISA." It is a graphic representation of the profile view of a wheelchair with occupant. See Chapter 11B, Figure 11B-703.7.2.1. ■

KEY STATION. [DSA-AC] *Certain rapid and light rail stations, and commuter rail stations, as defined under criteria established by the Department of Transportation in 49 CFR 37.47 and 49 CFR 37.51, respectively.*

KICK PLATE. *An abrasion-resistant plate affixed to the bottom portion of a door to prevent a trap condition and protect its surface.*

DSA

Advisory Definition of KICK PLATE. Although kick plates are not necessarily required by the code, they are often applied to areas of doors required to have a smooth surface and be free of abrupt surface changes. This provides a person in a wheelchair the option of opening a door by pushing with their feet or allows the front foot plates of a wheelchair to glide smoothly along the lower face of the door as a wheelchair user proceeds through a door. ■

KITCHEN OR KITCHENETTE. [DSA-AC] *A room, space or area with equipment for the preparation and cooking of food.*

LAVATORY. *A fixed bowl or basin with running water and drainpipe, as in a toilet or bathing facility, for washing or bathing purposes. (As differentiated from the definition of "Sink".)*

MAIL BOXES. [DSA-AC] *Receptacles for the receipt of documents, packages, or other deliverable matter. Mail boxes include, but are not limited to, post office boxes and receptacles provided by commercial mail-receiving agencies, apartment facilities or schools.*

MARKED CROSSING. *A crosswalk or other identified path intended for pedestrian use in crossing a vehicular way.*

MAY. [DSA-AC] *May denotes an option or alternative.*

MEZZANINE. *…*
[DSA-AC] *An intermediate level or levels between the floor and ceiling of any story with an aggregate floor area of not more than one-third of the area of the room or space in which the level or levels are located. Mezzanines have sufficient elevation that space for human occupancy can be provided on the floor below.*

MULTI-BEDROOM HOUSING UNIT. [DSA-AC] *A housing unit, intended for use by students at a place of education, with a kitchen and/or toilet and bathing rooms within the unit, such as an apartment, or dormitory. Multi-bedroom housing units are separate from one another and from common use spaces within a building.*

NFPA. [DSA-AC] *The National Fire Protection Association.*

NOSING. The leading edge of treads of stairs and of landings at the top of stairway flights.

OCCUPANT LOAD. The number of persons for which the means of egress of a building or portion thereof is designed.

OCCUPIABLE SPACE. A room or enclosed space designed for human occupancy in which individuals congregate for amusement, educational or similar purposes or in which occupants are engaged at labor, and which is equipped with means of egress and light and ventilation facilities meeting the requirements of this code.

OPEN RISER. *The space between two adjacent stair treads not closed by a riser.*

OPERABLE PART. *A component of an element used to insert or withdraw objects, or to activate, deactivate, or adjust the element.*

PASSENGER ELEVATOR. [DSA-AC] *See "Elevator, passenger"*

PATH OF TRAVEL. [DSA-AC] *An identifiable accessible route within an existing site, building or facility by means of which a particular area may be approached, entered and exited, and which connects a particular area with an exterior approach (including sidewalks, streets, and parking areas), an entrance to the facility, and other parts of the facility. When alterations, structural repairs or additions are made to existing buildings or facilities, the term "path of travel" also includes the toilet and bathing facilities, telephones, drinking fountains and signs serving the area of work.*

DSA

Advisory Definition of PATH OF TRAVEL. The term *PATH OF TRAVEL* applies only to alterations, structural repairs or additions to existing buildings or facilities. Path of travel elements may be subject to upgrade as part of the alteration to an existing building if they do not conform to current accessibility requirements. ■

PEDESTRIAN. *An individual who moves in walking areas with or without the use of walking assistive devices such as crutches, leg braces, wheelchairs, white cane, service animal, etc.*

PEDESTRIAN WAY. *A route by which a pedestrian may pass.*

PERMANENT. [DSA-AC] *Facilities which, are intended to be used for periods longer than those designated in this code under the definition of "Temporary."*

PERMIT. An official document or certificate issued by the authority having jurisdiction which authorizes performance of a specified activity.

> **DSA**
>
> **Advisory Definition of PERMIT.** In State-funded construction, a letter following plan review which approves the plans and allows the release of funds is equivalent to a "permit." ■

PICTOGRAM. [DSA-AC] *A pictorial symbol that represents activities, facilities, or concepts.*

PLACE OF PUBLIC ACCOMMODATION. *A facility operated by a private entity whose operations affect commerce and fall within at least one of the following categories:*

1. *Place of lodging, except for an establishment located within a facility that contains not more than five rooms for rent or hire and that actually is occupied by the proprietor of the establishment as the residence of the proprietor. For purposes of this code, a facility is a "place of lodging" if it is*

   (i) An inn, hotel, or motel; or

   (ii) A facility that

   (A) Provides guest rooms for sleeping for stays that primarily are short-term in nature (generally 30 days or less) where the occupant does not have the right to return to a specific room or unit after the conclusion of his or her stay; and

   (B) Provides guest rooms under conditions and with amenities similar to a hotel, motel, or inn, including the following:

   (1) On- or off-site management and reservations service;

   (2) Rooms available on a walk-up or call-in basis;

   (3) Availability of housekeeping or linen service; and

   (4) Acceptance of reservations for a guest room type without guaranteeing a particular unit or room until check-in, and without a prior lease or security deposit.

2. *A restaurant, bar, or other establishment serving food or drink;*

3. *A motion picture house, theater, concert hall, stadium, or other place of exhibition or entertainment;*

4. *An auditorium, convention center, lecture hall, or other place of public gathering;*

5. *A bakery, grocery store, clothing store, hardware store, shopping center, or other sales or rental establishment;*

6. *A Laundromat, dry-cleaner, bank, barber shop, beauty shop, travel service, shoe repair service, funeral parlor, gas station, office of an accountant or lawyer, pharmacy, insurance office, professional office of a health care provider, hospital, or other service establishment;*

7. *A terminal, depot, or other station used for specified public transportation;*

8. *A museum, library, gallery, or other place of public display or collection;*

9. *A park, zoo, amusement park, or other place of recreation;*

10. *A nursery, elementary, secondary, undergraduate, or postgraduate private school, or other place of education;*

11. *A day care center, senior citizen center, homeless shelter, food bank, adoption agency, or other social service center establishment;*

12. *A gymnasium, health spa, bowling alley, golf course, or other place of exercise or recreation;*

13. *A religious facility;*

14. *An office building; and*

15. *A public curb or sidewalk.*

PLATFORM. A raised area within a building used for worship, the presentation of music, plays or other entertainment; the head table for special guests; the raised area for lecturers and speakers; boxing and wrestling rings; theater-in-the-round stages; and similar purposes wherein there are no overhead hanging curtains, drops, scenery or stage effects other than lighting and sound. A temporary platform is one installed for not more than 30 days.

PLATFORM (WHEELCHAIR) LIFT. *A hoisting and lowering mechanism equipped with a car or platform or support that serves two landings of a building or structure and is designed to carry a passenger or passengers and/or luggage or other material a vertical distance as may be allowed.*

PLAY AREA. [DSA-AC] *A portion of a site containing play components designed and constructed for children.*

PLAY COMPONENT. [DSA-AC] *An element intended to generate specific opportunities for play, socialization, or learning. Play components are manufactured or natural; and are stand-alone or part of a composite play structure.*

POINT-OF-SALE DEVICE. [DSA-AC] *A device used for the purchase of a good or service where a personal identification number (PIN), zip code or signature is required.*

POWDER ROOM. *A room containing a water closet (toilet) and a lavatory, and which is not defined as a bathroom.*

POWER-ASSISTED DOOR. [DSA-AC] *A door used for human passage with a mechanism that helps to open the door, or relieves the opening resistance of a door, upon the activation of a switch or a continued force applied to the door itself.*

PRIVATE BUILDING OR FACILITY. [DSA-AC] *A place of public accommodation or a commercial building or facility subject to Chapter 1, Section 1.9.1.2.*

PROFESSIONAL OFFICE OF A HEALTH CARE PROVIDER. [DSA-AC] *See Chapter 11B. A location where a person or entity, regulated by the State to provide professional services related to the physical or mental health of an individual, makes such services available to the public. The facility housing the professional office of a health care provider only includes floor levels housing at least one health care provider, or any floor level designed or intended for use by at least one health care provider.*

DSA

Advisory Definition of PROFESSIONAL OFFICE OF A HEALTH CARE PROVIDER. The term *PROFESSIONAL OFFICE OF A HEALTH CARE PROVIDER* applies to the offices of doctors, psychologists, dentists, radiologists, and others certified or licensed by the State to provide physical or mental health care. ■

PUBLIC BUILDING OR FACILITY. [DSA-AC] *A building or facility or portion of a building or facility designed, constructed, or altered by, on behalf of, or for the use of a public entity subject to Chapter 1, Section 1.9.1.1.*

PUBLIC ENTITY. *Any state or local government; any department, agency, special-purpose district, or other instrumentality of a state or local government.*

PUBLIC ENTRANCE. An entrance that is not a service entrance or a restricted entrance.

PUBLIC HOUSING. *Housing facilities owned, operated, or constructed by, for or on behalf of a public entity including but not limited to the following:*

1. *Publically owned and/or operated one- or two- family dwelling units or congregate residences;*
2. *Publically owned and/or operated buildings or complexes with three or more residential dwellings units;*
3. ***Reserved.***
4. *Publically owned and/or operated homeless shelters, group homes and similar social service establishments;*
5. *Publically owned and/or operated transient lodging, such as hotels, motels, hostels and other facilities providing accommodations of a short term nature of not more than 30 days duration;*
6. *Housing at a place of education owned or operated by a public entity, such as housing on or serving a public school, public college or public university campus;*
7. *Privately owned housing made available for public use as housing.*

PUBLIC USE. [DSA-AC] *Interior or exterior rooms, spaces or elements that are made available to the public. Public use may be provided at a building or facility that is privately or publicly owned. Private interior or exterior rooms, spaces or elements associated with a residential dwelling unit provided by a public housing program or in a public housing facility are not public use areas and shall not be required to be made available to the public. In the context of public housing, public use is the provision of housing programs by, for or on behalf of a public entity.*

PUBLIC-USE AREAS. *Interior or exterior rooms or spaces of a building that are made available to the general public and do not include common use areas. Public use areas may be provided at a building that is privately or publicly owned.*

DSA

Advisory Definition of PUBLIC-USE AREAS. Examples of public use areas may include a hotel lobby, movie theater, concert hall, public restroom, sales floor of a retail store, or dining room within a restaurant. ■

PUBLIC WAY. A street, alley or other parcel of land open to the outside air leading to a street, that has been deeded, dedicated or otherwise permanently appropriated to the public for public use and which has a clear width and height of not less than 10 feet (3048 mm).

QUALIFIED HISTORIC BUILDING OR FACILITY. [DSA-AC] *A building or facility that is listed in or eligible for listing in the National Register of Historic Places, or designated as historic under an appropriate State or local law. See C.C.R. Title 24, Part 8.*

RAMP. A walking surface that has a running slope steeper than one unit vertical in 20 units horizontal (5-percent slope).

REASONABLE PORTION. [DSA-AC] *That segment of a building, facility, area, space or condition, which would normally be necessary if the activity therein is to be accessible by persons with disabilities.*

> **DSA**
>
> **Advisory Definition of REASONABLE PORTION.** The term is intended to mean that the building or facility provides equitable opportunities, advantages, and ease of use for people with disabilities as is otherwise being made available to the general public. It is not intended to mean reasonable from a cost point of view. ■

RECOMMEND. [DSA-AC] *Does not require mandatory acceptance, but identifies a suggested action that shall be considered for the purpose of providing a greater degree of accessibility to persons with disabilities.*

REMODELING. [DSA-AC] *See "Alteration."*

REPAIR. The reconstruction or renewal of any part of an existing building for the purpose of its maintenance.

RESIDENTIAL DWELLING UNIT. [DSA-AC] *A unit intended to be used as a residence that is primarily long-term in nature. Residential dwelling units do not include transient lodging, inpatient medical care, licensed long-term care, and detention or correctional facilities.*

RESTRICTED ENTRANCE. An entrance that is made available for common use on a controlled basis but not public use and that is not a service entrance.

RISER. *The upright part between two adjacent stairs treads.*

RUNNING SLOPE. *The slope that is parallel to the direction of travel. (As differentiated from the definition of "Cross Slope".)*

SELF-SERVICE STORAGE. [DSA-AC] *Building or facility designed and used for the purpose of renting or leasing individual storage spaces to customers for the purpose of storing and removing personal property on a self-service basis.*

SERVICE ENTRANCE. An entrance intended primarily for delivery of goods or services.

SHALL. [DSA-AC] *Denotes a mandatory specification or requirement.*

SHOPPING CENTER (or SHOPPING MALL). [DSA-AC] *One or more sales or rental establishments or stores. A shopping center may include a series of buildings on a common site, connected by a common pedestrian access route on, above or below the ground floor, that is either under common ownership or common control or developed either as one project or as a series of related projects. For the purposes of this section, "shopping center" or "shopping mall" includes a covered mall building.*

> **DSA**
>
> **Advisory Definition of SHOPPING CENTER (or SHOPPING MALL).** The California definition for *SHOPPING CENTER* is quite different from the federal definition. Federal ADA Regulations defines a shopping center or shopping mall as a building housing five or more sales or rental establishments. However, California accessibility provisions define a shopping center as only one or more sales or rental establishments or stores. ■

SHOULD. [DSA-AC] *Denotes an advisory specification or recommendation.*

SIDEWALK. *A surfaced pedestrian way contiguous to a street used by the public. (As differentiated from the definition of "Walk".)*

DSA

Advisory Definition of SIDEWALK. There is an important distinction between *SIDEWALK* and *WALK* and they are treated differently under the CBC. As noted in this definition, a sidewalk is contiguous to a street while a walk is not. ■

SIGNAGE. [DSA-AC] *Displayed verbal, symbolic, tactile, and/or pictorial information.*

SINK. *A fixed bowl or basin with running water and drainpipe, as in a kitchen or laundry, for washing dishes, clothing, etc. (As differentiated from the definition of "Lavatory".)*

SITE. A parcel of land bounded by a lot line or a designated portion of a public right-of-way.

SLEEPING ACCOMMODATIONS. *Rooms intended and designed for sleeping.*

SOFT CONTAINED PLAY STRUCTURE. [DSA-AC] *A play structure made up of one or more play components where the user enters a fully enclosed play environment that utilizes pliable materials, such as plastic, netting, or fabric.*

SPACE. *A definable area, such as, a room, toilet room, hall, assembly area, entrance, storage room, alcove, courtyard, or lobby.*

SPECIFIED PUBLIC TRANSPORTATION. [DSA-AC] *Transportation by bus, rail, or any other conveyance (other than aircraft) provided by a private entity to the general public, with general or special service (including charter service) on a regular and continuing basis.*

STAGE. A space within a building utilized for entertainment or presentations, which includes overhead hanging curtains, drops, scenery or stage effects other than lighting and sound.

STAIR. A change in elevation, consisting of one or more risers.

STAIRWAY. One or more flights of stairs, either exterior or interior, with the necessary landings and platforms connecting them, to form a continuous and uninterrupted passage from one level to another.

STORY. ...
[DSA-AC] *That portion of a building or facility designed for human occupancy included between the upper surface of a floor and upper surface of the floor or roof next above. A story containing one or more mezzanines has more than one floor level. If the finished floor level directly above a basement or unused under-floor space is more than six feet (1829 mm) above grade for more than 50 percent of the total perimeter or is more than 12 feet (3658 mm) above grade at any point, the basement or unused under-floor space shall be considered as a story.*

STRUCTURAL FRAME. [DSA-AC] *The columns and the girders, beams and trusses having direct connections to the columns and all other members that are essential to the stability of the building or facility as a whole.*

STRUCTURE. That which is built or constructed.

TACTILE. *An object that can be perceived using the sense of touch.*

TACTILE SIGN. *A sign containing raised characters and/or symbols and accompanying Braille.*

TECHNICALLY INFEASIBLE. An alteration of a building or a facility, that has little likelihood of being accomplished because the existing structural conditions require the removal or alteration of a load-bearing member that is an essential part of the structural frame, or because other existing physical or site constraints prohibit modification or addition of elements, spaces or features that are in full and strict compliance with the minimum requirements for new construction and which are necessary to provide accessibility.

TEEING GROUND. [DSA-AC] *In golf, the starting place for the hole to be played.*

TEMPORARY. [DSA-AC] *Buildings and facilities intended for use at one location for not more than one year and seats intended for use at one location for not more than 90 days.*

DSA

Advisory Definition of TEMPORARY. Temporary buildings and facilities must be accessible to the same degree as permanent facilities per CA Gov. Code §4451(e). ■

TEXT TELEPHONE. *Machinery or equipment that employs interactive text-based communications through the transmission of coded signals across the standard telephone network. Text telephones can include, for example, devices known as TTYs (teletypewriters) or computers.*

TRANSFER DEVICE. [DSA-AC] *Equipment designed to facilitate the transfer of a person from a wheelchair or other mobility aid to and from an amusement ride seat.*

TRANSIENT LODGING. *A building or facility containing one or more guest room(s) for sleeping that provides accommodations that are primarily short-term in nature (generally 30 days or less). Transient lodging does not include residential dwelling units intended to be used as a residence, inpatient medical care facilities, licensed long-term care facilities, detention or correctional facilities, or private buildings or facilities that contain no more than five rooms for rent or hire and that are actually occupied by the proprietor as the residence of such proprietor.* ***[DSA-AC]*** *See also the definition of Place of Public Accommodation.*

TRANSIT BOARDING PLATFORM. [DSA-AC] *A horizontal, generally level surface, whether raised above, recessed below or level with a transit rail, from which persons embark/disembark a fixed rail vehicle.*

TRANSITION PLATE. [DSA-AC] *A sloping pedestrian walking surface located at the end(s) of a gangway.*

TREAD. *The horizontal part of a step.*

TTY. *An abbreviation for teletypewriter. Machinery that employs interactive text-based communication through the transmission of coded signals across the telephone network. TTYs may include, for example, devices known as TDDs (telecommunication display devices or telecommunication devices for deaf persons) or computers with special modems. TTYs are also called text telephones.*

UNREASONABLE HARDSHIP. *When the enforcing agency finds that compliance with the building standard would make the specific work of the project affected by the building standard infeasible, based on an overall evaluation of the following factors:*

1. *The cost of providing access.*

2. *The cost of all construction contemplated.*

3. *The impact of proposed improvements on financial feasibility of the project.*

4. *The nature of the accessibility which would be gained or lost.*

5. *The nature of the use of the facility under construction and its availability to persons with disabilities.*

The details of any finding of unreasonable hardship shall be recorded and entered in the files of the enforcing agency.

USE ZONE. [DSA-AC] *The ground level area beneath and immediately adjacent to a play structure or play equipment that is designated by ASTM F 1487 for unrestricted circulation around the play equipment and where it is predicted that a user would land when falling from or exiting the play equipment.*

VALUATION THRESHOLD. [DSA-AC] *An annually adjusted, dollar-amount figure used in part to determine the extent of required path of travel upgrades. The baseline valuation threshold of $50,000 is based on the January 1981, "ENR US20 Cities" Average Construction Cost Index (CCI) of 3372.02 as published in Engineering News Record, McGraw Hill Publishing Company. The current valuation threshold is determined by multiplying the baseline valuation threshold by a ratio of the current year's January CCI to the baseline January 1981 CCI.*

DSA

Advisory Definition of VALUATION THRESHOLD. The valuation threshold is adjusted each year in January using the Engineering News Record 20 Cities Construction Cost Index. Valuation thresholds for the current year and recent years dating back to 2000 are available on the Division of the State Architect web site at: http://www.dgs.ca.gov/dsa/Programs/progAccess/threshold.aspx. ■

VARIABLE MESSAGE SIGNS (VMS). [DSA-AC] *Electronic signs that have a message with the capacity to change by means of scrolling, streaming, or paging across a background.*

VARIABLE MESSAGE SIGN (VMS) CHARACTERS. [DSA-AC] *Characters of an electronic sign are composed of pixels in an array. High resolution VMS characters have vertical pixel counts of 16 rows or greater. Low resolution VMS characters have vertical pixel counts of 7 to 15 rows.*

VEHICULAR WAY. *A route provided for vehicular traffic, such as in a street, driveway, or parking facility.*

WALK. [DSA-AC] *An exterior prepared surface for pedestrian use, including pedestrian areas such as plazas and courts. (As differentiated from the definition of "Sidewalk".)*

DSA

Advisory Definition of WALK. There is an important distinction between *SIDEWALK* and *WALK* and they are treated differently under the CBC. A sidewalk is contiguous to a street while a walk is not. ■

WET BAR. [DSA-AC] *An area or space with a counter equipped with a sink and running water but without cooking facilities.*

WHEELCHAIR. *A chair mounted on wheels to be propelled by its occupant manually or with the aid of electric power, of a size and configuration conforming to the recognized standard models of the trade.*

WHEELCHAIR SPACE. Space for a single wheelchair and its occupant.

WORKSTATION. ...
[DSA-AC] *An area defined by equipment and/or work surfaces intended for use by employees only, and generally for one or a small number of employees at a time. Examples include ticket booths; the employee side of grocery store check stands; the bartender area behind a bar; the employee side of snack bars, sales counters and public counters; guardhouses; toll booths; kiosk vending stands; lifeguard stations; maintenance equipment closets; counter and equipment areas in restaurant kitchens; file rooms; storage areas; etc.*

WORK AREA EQUIPMENT. [DSA-AC] *Any machine, instrument, engine, motor, pump, conveyor, or other apparatus used to perform work. As used in this document, this term shall apply only to equipment that is permanently installed or built-in in employee work areas. Work area equipment does not include passenger elevators and other accessible means of vertical transportation.*

CHAPTER 4
SPECIAL DETAILED REQUIREMENTS BASED ON USE AND OCCUPANCY

CHAPTER 4 – MATRIX ADOPTION TABLE

Adopting Agency		DSA	
		AC	SS
Adopt entire California Chapter			
Adopt entire California Chapter as amended (amended sections listed below)			
Adopt only those sections that are listed below		X	
Chapter / Section	Codes		
406.4.1	CA	X	
412.3.5	CA	X	
419.7			

SECTION 406
MOTOR-VEHICLE-RELATED OCCUPANCIES

406.4 Public parking garages.
406.4.1 Clear height. The clear height of each floor level in vehicle e and pedestrian traffic areas shall be not less than 7 feet (2134 mm). ***(HCD 1-AC)*** *The clear height of vehicle and pedestrian areas required to be accessible shall comply with Chapter 11A.* ∗

DSA

Advisory 406.4.1 Clear height. While the minimum height is required to be 7'-0" by this section, greater vertical clearance is required at van-accessible parking spaces, standard accessible parking spaces, the vehicular routes to these spaces, and passenger drop-off and loading zones. Refer to Chapters 11A and 11B for requirements in these areas. ■

SECTION 412
AIRCRAFT-RELATED OCCUPANCIES

412.3 Airport traffic control towers. …
412.3.5 Accessibility. ***[DSA-AC]*** *In air traffic control towers, an accessible route shall not be required to serve the cab and the equipment areas on the floor immediately below the cab.*

∗ In section 406.4.1 the last sentence is incorrect. The sentence should read - ***(HCD 1-AC) [DSA-AC]*** *The clear height of vehicle and pedestrian areas required to be accessible shall comply with Chapter 11A or 11B, as applicable.*

419.7 Accessibility. Accessibility shall be designed in accordance with *Chapters 11A and/or 11B, when applicable* for the function served.

CHAPTER 9
FIRE PROTECTION SYSTEMS

CHAPTER 9 – MATRIX ADOPTION TABLE

Adopting Agency		DSA	
		AC	SS
Adopt entire California Chapter			
Adopt entire California Chapter as amended (amended sections listed below)			
Adopt only those sections that are listed below		X	
Chapter / Section	Codes		
907.4.2.2	CA	X	
907.5.2.3 w/ Exc 1, 2 & 3	CA	X	
907.5.2.3.1	CA	X	
907.5.2.3.2	IBC	X	
907.5.2.3.3	IBC	X	
Table 907.5.2.3.3	CA	X	
907.5.2.3.4	CA	X	
907.5.2.3.5	CA	X	

SECTION 907
FIRE ALARM AND DETECTION SYSTEMS

907.4.2 Manual fire alarm boxes.

907.4.2.2 Height. The height of the manual fire alarm boxes shall be a minimum of 42 inches (1067 mm) and a maximum of 48 inches (*1219* mm) measured vertically, from the floor level to the activating handle or lever of the box. *Manual fire alarm boxes shall also comply with Section 1117B.6, Item 4.* ∗

Exception: [DSA-AC] *In existing buildings there is no requirement to retroactively relocate existing manual fire alarm boxes to a minimum of 42 inches (1067 mm) and a maximum of 48 inches (1219 mm) from the floor level to the activating handle or lever of the box.*

DSA

Advisory 907.4.2.2 Height. CBC Section 11B-309.4 requires controls and operating mechanisms to be operable with one hand without tight grasping, pinching or twisting of the wrist (must be operable by persons with limited manual dexterity). The maximum effort to activate controls shall be no greater than 5 pounds-force. ■

907.5.2 Alarm notification appliances.

907.5.2.3 Visible alarms. Visible alarm notification appliances shall be provided in accordance with Sections 907.5.2.3.1 through 907.5.2.3.*5*.

∗ In Section 907.4.2.2 the last sentence is incorrect. The sentence should read - *Manual fire alarm boxes shall also comply with Section 11B-309.4. In addition, "highest point of the" is missing in the first sentence and should be inserted before activating handle.*

Exceptions:

1. *In other than Group I-2 and I-2.1,* visible alarm notification appliances are not required in *alterations*, except where an existing fire alarm system is upgraded or replaced, or a new fire alarm system is installed.

2. Visible alarm notification appliances shall not be required in *enclosed exit stairways, exterior exit stairs and exterior exit ramps.*

3. Visible alarm notification appliances shall not be required in elevator cars.

907.5.2.3.1 Public and common use areas. Visible alarm notification appliances shall be provided in public *use* areas and common *use* areas*, including but not limited to:*

1. *Sanitary facilities including restrooms, bathrooms and shower rooms*
2. *Corridors*
3. *Music practice rooms*
4. *Band rooms*
5. *Gymnasiums*
6. *Multipurpose rooms*
7. *Occupational shops*
8. *Occupied rooms where ambient noise impairs hearing of the fire alarm*
9. *Lobbies*
10. *Meeting rooms*
11. *Classrooms*

DSA

Advisory 907.5.2.3.1 Public and common use areas. This list is not exhaustive. In new construction, all public- and common-use areas shall have visible alarms if audible alarms are provided. ■

907.5.2.3.2 Employee work areas. Where employee work areas have audible alarm coverage, the notification appliance circuits serving the employee work areas shall be initially designed with a minimum of 20-percent spare capacity to account for the potential of adding visible notification appliances in the future to accommodate hearing impaired employee(s).

907.5.2.3.3 Groups R-1 *and R-2.1*. Group R-1 *and R-2.1* dwelling units or sleeping units in accordance with Table 907.5.2.3.3 shall be provided with a visible alarm notification appliance, activated by both the in-room smoke alarm and the building fire alarm system.

TABLE 907.5.2.3.3
VISIBLE ALARMS

NUMBER OF SLEEP UNITS	SLEEPING ACCOMMODATIONS WITH VISIBLE ALARMS
6 to 25	2

26 to 50	4
51 to 75	7
76 to 100	9
101 to 150	12
151 to 200	14
201 to 300	17
301 to 400	20
401 to 500	22
501 to 1,000	5% of total
1,001 and over	50 plus 3 for each 100 over 1,000

[SFM] [DSA-AC] *Also see Chapter 11B, Section 11B-224.4 and Table 11B-224.4.*

907.5.2.3.4 Group R-2. In Group R-2 occupancies required by Section 907 to have a fire alarm system, all dwelling units and sleeping units shall be provided with the capability to support visible alarm notification appliances in accordance with *NFPA 72.* Such capability shall be permitted to include the potential for future interconnection of the building fire alarm system with the unit smoke alarms, replacement of audible appliances with combination audible/visible appliances, or future extension of the existing wiring from the unit smoke alarm locations to required locations for visible appliances.

907.5.2.3.5 Groups R-2.1, R-3.1 and R-4. *Protective social care facilities which house persons who are hearing impaired, shall be provided with notification appliances for the hearing impaired installed in accordance with NFPA 72 and which shall activated upon initiation of the fire alarm system or the smoke alarms.*

CHAPTER 10 – MATRIX ADOPTION TABLE

Adopting Agency		DSA	
		AC	SS
Adopt entire California Chapter			
Adopt entire California Chapter as amended (amended sections listed below)			
Adopt only those sections that are listed below		X	
Chapter / Section	Codes		
1003.1, not SFM exception	CA	X	
1007.1	CA	X	
1007.2	CA	X	
1007.2.1	IBC	X	
1007.3	CA	X	
1007.4	IBC	X	
1007.5	CA	X	
1007.5.1	IBC	X	
1007.6	CA	X	
1007.6.1	CA	X	
1007.6.2	CA	X	
1007.6.3	IBC	X	
1007.7	CA	X	
1007.7.1	IBC	X	
1007.7.2	IBC	X	
1007.7.3	IBC	X	
1007.7.4	IBC	X	
1007.7.5	IBC	X	
1007.7.6	IBC	X	
1007.8	IBC	X	
1007.8.1	CA	X	
1007.8.1.1	CA	X	
1007.8.2	CA	X	
1007.9	CA	X	
1007.10	CA	X	
1007.11	CA	X	
1007.12	CA	X	
1008 (1st paragraph below title only)	CA	X	
1008.1.9.7 (Item 5.1 only)	CA	X	
1009 (1ST paragraph below title only)	CA	X	
1009.7.2 Exc. 6 only	CA	X	
1009.15 (2nd paragraph only)	CA	X	
1010 (1st paragraph below title only)	CA	X	
1011.4	CA	X	
1012 1st paragraph below title only	CA	X	
1013.2	IBC	X	
1013.3	CA	X	
1017 (1st paragraph below title	CA	X	

only)			
1017.3 Exc only	CA	X	
1022.9 2nd paragraph only	CA	X	

SECTION 1003
GENERAL MEANS OF EGRESS

1003.1 Applicability. The general requirements specified in Sections 1003 through 1013 shall apply to all three elements of the means of egress system, in addition to those specific requirements for the exit access, the exit and the exit discharge detailed elsewhere in this chapter.

[DSA-AC] *In addition to the requirement of this chapter, means of egress, which provide access to, or egress from, buildings or facilities where accessibility is required for applications listed in Section 1.8.2.1.2 regulated by the Department of Housing and Community Development, or Section 1.9.1 regulated by the Division of the State Architect-Access Compliance, shall also comply with Chapter 11A or Chapter 11B, as applicable.*

SECTION 1007
ACCESSIBLE MEANS OF EGRESS

1007.1 Accessible means of egress required. Accessible means of egress shall comply with this section. Accessible spaces shall be provided with not less than one accessible means of egress. Where more than one means of egress are required by Section 1015.1 or 1021.1 from any accessible space, each accessible portion of the space shall be served by accessible means of egress *in at least the same number as required by Section 1015.1 or 1021.1. In addition to the requirements of this chapter, means of egress, which provide access to, or egress from, buildings for persons with disabilities, shall also comply with the requirements of Chapter 11A or 11B as applicable.*

Exceptions:

1. Accessible means of egress are not required in alterations to existing buildings.

2. One accessible means of egress is required from an accessible mezzanine level in accordance with Section 1007.3, 1007.4 or 1007.5 *and Chapter 11A or 11B, as applicable*.

3. In assembly areas with sloped or stepped aisles, one accessible means of egress is permitted where the common path of travel is accessible and meets the requirements in Section 1028.8*, and Chapter 11A or 11B, as applicable*.

1007.2 Continuity and components. Each required accessible means of egress shall be continuous to a public way and shall consist of one or more of the following components:

1. Accessible routes complying with *Chapter 11A, Sections 1110A.1 and 1120A, or Chapter 11B, Sections 11B-206 and 11B-402, as applicable*.

2. Interior exit stairways complying with Sections 1007.3 and 1022*, Chapter 11A, Section 1123A, or Chapter 11B, Sections 11B-210 and 11B-504, as applicable*.

3. Interior exit access stairways complying with Sections 1007.3 and 1009.3*, Chapter 11A, Section 1123A, or Chapter 11B, Sections 11B-210 and 11B-504, as applicable*.

4. Exterior exit stairways complying with Sections 1007.3, 1026*, and Chapter 11A, Section 1115A, or Chapter 11B, Sections 11B-210 and 11B-504, as applicable*.

5. Elevators complying with Section 1007.4*, and Chapter 11A, Section 1124A, or Chapter 11B, Sections 11B-206.6 and 11B-407, as applicable*.

6. Platform lifts complying with Section 1007.5 *and Chapter 11A, Section 1124A, or Chapter 11B, Sections 11B-206.7, 11B-207.2 and 11B-410 as applicable*.

7. Horizontal exits complying with Section 1025.

8. Ramps complying with Section 1010*, and Chapter 11A, Sections 1114A and 1122A, or Chapter 11B, Section 11B-405, as applicable*.

9. Areas of refuge complying with Section 1007.6.

10. Exterior area for assisted rescue complying with Section 1007.7.

1007.2.1 Elevators required. In buildings where a required accessible floor is four or more stories above or below a level of exit discharge, at least one required accessible means of egress shall be an elevator complying with Section 1007.4.

Exceptions:

1. In buildings equipped throughout with an automatic sprinkler system installed in accordance with Section 903.3.1.1 or 903.3.1.2, the elevator shall not be required on floors provided with a horizontal exit and located at or above the levels of exit discharge.

2. In buildings equipped throughout with an automatic sprinkler system installed in accordance with Section 903.3.1.1 or 903.3.1.2, the elevator shall not be required on floors provided with a ramp conforming to the provisions of Section 1010.

1007.3 Stairways. In order to be considered part of an accessible means of egress*,* a stairway between stories shall have a clear width of 48 inches (1219 mm) minimum between handrails and shall either incorporate an area of refuge within an enlarged floor-level landing or shall be accessed from either an area of refuge complying with Section 1007.6 or a horizontal exit. Exit access stairways that connect levels in the same story are not permitted as part an accessible means of egress. ***[DSA-AC]*** *In addition, exit stairways shall comply with Chapter 11A, Section 1115A and 1123A, or Chapter 11B, Sections 11B-210 and 11B-504, as applicable.*

Exceptions:

1. The clear width of 48 inches (1219 mm) between handrails is not required in buildings equipped throughout with an automatic sprinkler system installed in accordance with Section 903.3.1.1 or 903.3.1.2.

2. Areas of refuge are not required at stairways in buildings equipped throughout by an automatic sprinkler system installed in accordance with Section 903.3.1.1 or 903.3.1.2.

3. The clear width of 48 inches (1219 mm) between handrails is not required for stairways accessed from a horizontal exit.

4. Areas of refuge are not required at stairways serving open parking garages.

5. Areas of refuge are not required for smoke protected seating areas complying with Section 1028.6.2.

6. The areas of refuge are not required in Group R-2 occupancies.

1007.4 Elevators. In order to be considered part of an accessible means of egress, an elevator shall comply with the emergency operation and signaling device requirements of *California Code of*

Regulations, Title 8, Division 1, Chapter 4, Subchapter 6, Elevator Safety Orders. Standby power shall be provided in accordance with Chapter 27 and Section 3003. The elevator shall be accessed from either an area of refuge complying with Section 1007.6 or a horizontal exit.

Exceptions:

1. Elevators are not required to be accessed from an area of refuge or horizontal exit in open parking garages.

2. Elevators are not required to be accessed from an area of refuge or horizontal exit in buildings and facilities equipped throughout with an automatic sprinkler system installed in accordance with Section 903.3.1.1 or 903.3.1.2.

3. Elevators not required to be located in a shaft in accordance with Section 712 are not required to be accessed from an area of refuge or horizontal exit.

4. Elevators are not required to be accessed from an area of refuge or horizontal exit for smoke protected seating areas complying with Section 1028.6.2.

1007.5 Platform lifts. Platform (wheelchair) lifts shall not serve as part of an accessible means of egress, except where allowed as part of a required accessible route in *Chapter 11A, Sections 1121A and 1124A.11, or Chapter 11B, Sections 11B-206.7.1 through 11B-206.7.10, as applicable*. Standby power shall be provided in accordance with Chapter 27 for platform lifts permitted to serve as part of a means of egress.

[DSA-AC] *See Chapter 11B, Section 11B-207.2 for additional accessible means of egress requirements at platform lifts.*

1007.5.1 Openness. Platform lifts on an accessible means of egress shall not be installed in a fully enclosed hoistway.

1007.6 Areas of refuge. Every required area of refuge shall be accessible from the space it serves by an accessible means of egress. The maximum travel distance from any accessible space to an area of refuge shall not exceed the travel distance permitted for the occupancy in accordance with Section 1016.1. Every required area of refuge shall have direct access to a stairway complying with Sections 1007.3 or an elevator complying with Section 1007.4. Where an elevator lobby is used as an area of refuge, the shaft and lobby shall comply with Section 1022.10 for smokeproof enclosures except where the elevators are in an area of refuge formed by a horizontal exit or smoke barrier. ***[DSA-AC]*** *Areas of refuge shall comply with the requirements of this code and shall adjoin an accessible route complying with Sections 11B-206 and 11B-402.*

1007.6.1 Size. Each area of refuge shall be sized to accommodate *two* wheelchair space*s that are not less than* 30 inches by 48 inches (762 mm by 1219 mm)*. The total number of such 30-inch by 48-inch (762 mm by 1219 mm) spaces per story shall be not less than one for every 200 persons of calculated occupant load served by the area of refuge.* Such wheelchair spaces shall not reduce the required means of egress width. Access to any of the required wheelchair spaces in an area of refuge shall not be obstructed by more than one adjoining wheelchair space.

Exception: *The enforcing agency may reduce the size of each required area of refuge to accommodate one wheelchair space that is not less than 30 inches by 48 inches (762 mm by 1219 mm) on floors where the occupant load is less than 200.*

1007.6.2 Separation. Each area of refuge shall be separated from the remainder of the story by a smoke barrier complying with Section 709 or a horizontal exit complying with Section 1025. Each area of refuge shall be designed to minimize the intrusion of smoke.

Exception: Areas of refuge located within an enclosure for exit access stairways or interior exit stairways.

1007.6.3 Two-way communication. Areas of refuge shall be provided with a two-way communication system complying with Section 1007.8.1 and 1007.8.2.

1007.7 Exterior area for assisted rescue. Exterior areas for assisted rescue shall be accessed by an accessible route from the area served. Exterior areas for assisted rescue shall be permitted in accordance with Section 1007.7.1 or 1007.7.2.

1007.7.1 Level of exit discharge. Where the exit discharge does not include an accessible route from an exit located on a level of exit discharge to a public way, an exterior area of assisted rescue shall be provided on the exterior landing in accordance with Sections 1007.7.3 through 1007.7.6.

1007.7.2 Outdoor facilities. Where exit access from the area serving outdoor facilities is essentially open to the outside, an exterior area of assisted rescue is permitted as an alternative to an area of refuge. Every required exterior area of assisted recue shall have direct access to an interior exit stairway, exterior stairway, or elevator serving as an accessible means of egress component. The exterior area of assisted rescue shall comply with Sections 1007.7.3 through 1007.7.6 and shall be provided with a two-way
communication system complying with Sections 1007.8.1 and 1007.8.2.

1007.7.3 Size. Each exterior area for assisted rescue shall be sized to accommodate wheelchair spaces in accordance with Section 1007.6.1.

1007.7.4 Separation. Exterior walls separating the exterior area of assisted rescue from the interior of the building shall have a minimum fire-resistance rating of 1 hour, rated for exposure to fire from the inside. The fire-resistance-rated exterior wall construction shall extend horizontally 10 feet (3048 mm) beyond the landing on either side of the landing or equivalent fire-resistance-rated construction is permitted to extend out perpendicular to the exterior wall 4 feet (1219 mm) minimum on the side of the landing. The fire-resistance-rated construction shall extend vertically from the ground to a point 10 feet (3048 mm) above the floor level of the area for assisted rescue or to the roof line, whichever is lower. Openings within such fire-resistance-rated exterior walls shall be protected in accordance with Section 716.

1007.7.5 Openness. The exterior area for assisted rescue shall be open to the outside air. The sides other than the separation walls shall be at least 50 percent open, and the open area shall be distributed so as to minimize the accumulation of smoke or toxic gases.

1007.7.6 Stairway. Stairways that are part of the means of egress for the exterior area for assisted rescue shall provide a clear width of 48 inches (1219 mm) between handrails.

Exception: The clear width of 48 inches (1219 mm) between handrails is not required at stairways serving buildings equipped throughout with an automatic sprinkler system installed in accordance with Section 903.3.1.1 or 903.3.1.2.

1007.8 Two-way communication. A two-way communication system shall be provided at the elevator landing on each accessible floor that is one or more stories above or below the story of exit discharge complying with Sections 1007.8.1 and 1007.8.2.

Exceptions:

1. Two-way communication systems are not required at the elevator landing where the two-way communication system is provided within areas of refuge in accordance with Section 1007.6.3.

2. Two-way communication systems are not required on floors provided with ramps conforming to the provisions of Section 1010.

1007.8.1 System requirements. Two-way communication systems shall provide communication between each required location *and* a central control point location approved by the fire department. Where the central control point is not constantly attended, a two-way communication system shall have a timed automatic telephone dial-out capability to *an approved* monitoring location. The two-way communication system shall include both audible and visible signals.

1007.8.1.1 Visible communication method. [DSA-AC] *A button complying with Section 1138A.4 or Sections 11B-205 and 11B-309 in the area of refuge shall activate both a light in the area of refuge indicating that rescue has been requested and a light at the central control point indicating that rescue is being requested. A button at the central control point shall activate both a light at the central control point and a light in the area of refuge indicating that the request has been received.*

1007.8.2 Directions. Directions for the use of the two-way communication system, instructions for summoning assistance via the two-way communication system and written identification of the *specific story, floor* location *and building address or other building identifier* shall be posted adjacent to the two-way communication system.

1007.9 Signage. Signage indicating special accessibility provisions shall be provided as shown:

1. Each door providing access to an area of refuge from an adjacent floor area shall be identified by a sign stating: AREA OF REFUGE.

2. Each door providing access to an exterior area for assisted rescue shall be identified by a sign stating: EXTERIOR AREA FOR ASSISTED RESCUE.

Signage shall comply with Chapter 11A, Section 1143A and Chapter 11B, *Section 11B-703.5 as applicable,* requirements for visual characters and include the International Symbol of Accessibility *complying with Chapter 11B, Section 11B-703.7.2.1*. Where exit sign illumination is required by Section 1011.2, the signs shall be illuminated. Additionally, raised character and Braille signage complying with Chapter 11A, Section 1143A and Chapter 11B, *Sections 11B-703.1, 11B-703.2, 11B-703.3 and 11B-703.5, and the International Symbol of Accessibility complying with Chapter 11B, Section 11B-703.7.2.1,* shall be located at each door to an area of refuge and exterior area for assisted rescue in accordance with Section 1011.4.

1007.10 Directional signage. Direction signage *complying with Chapter 11B, Section 11B-703.5* indicating the location of the other means of egress and which are accessible means of egress shall be provided at the following:

1. At exits serving a required accessible space but not providing an approved accessible means of egress.

2. At elevator landings.

3. Within areas of refuge.

1007.11 Instructions. In areas of refuge and exterior areas for assisted rescue, instructions on the use of the area under emergency conditions shall be posted. The instructions shall include all of the following *and shall comply with Chapter 11B, Section 11B-703.5*:

1. Persons able to use the exit stairway do so as soon as possible, unless they are assisting others.

2. Information on planned availability of assistance in the use of stairs or supervised operation of elevators and how to summon such assistance.

3. Directions for use of the two-way communications system where provided.

1007.12 Alarms/emergency warning systems/accessibility. *If emergency warning systems are required, they shall activate a means of warning the hearing impaired. Emergency warning systems as*

part of the fire-alarm system shall be designed and installed in accordance with NFPA 72 as amended in Chapter 35.

SECTION 1008
DOORS, GATES AND TURNSTILES

[DSA-AC] *In addition to the requirements of this section, means of egress, which provide access to, or egress from, buildings or facilities where accessibility is required for applications listed in Section 1.9.1 regulated by the Division of the State Architect—Access Compliance, shall also comply with Chapter 11A or Chapter 11B, Sections 11B-206.5 and 11B-404, as applicable.*

1008.1.9 Door operations.

1008.1.9.7 Delayed egress locks. …

1. ...
2. …
3. …
4. …

5. A sign shall be provided on the door located above and within 12 inches (305 mm) of the release device reading: "KEEP PUSHING. THIS DOOR WILL OPEN IN 15 [30] SECONDS. ALARM WILL SOUND." *Sign lettering shall be at least 1 inch (25 mm) in height and shall have a stroke of not less than 1/8 inch (3.2 mm).*

   5.1 A tactile sign shall also be provided in Braille and raised characters, which complies with Sections 11B-703.1, 11B-703.2, 11B-703.3 and 11B-703.5.

6. ...
7. ...
8. ...
9. ...

SECTION 1009
STAIRWAYS

[DSA-AC] *In addition to the requirements of this section, means of egress, which provide access to, or egress from, buildings or facilities where accessibility is required for applications listed in Section 1.9.1 regulated by the Division of the State Architect-Access Compliance, shall also comply with Chapter 11A or Chapter 11B, Sections 11B-210 and 11B-504, as applicable.*

1009.7 Stair treads and risers. …

1009.7.2 Riser height and tread depth. ...

Exceptions:

1. ...
2. ...
3. ...
4. ...
5. ...

6. See Section 3404.1 for the replacement of existing stairways. ***[DSA-AC]*** *For applications listed in Section 1.9.1 regulated by the Division of the State Architect-Access Compliance, see Chapter 11B, Section 11B-202.*

7. ...
8. ...

1009.15 Handrails. ...

[DSA-AC] *For applications listed in Section 1.9.1 regulated by the Division of the State Architect-Access Compliance, see Chapter 11B, Sections 11B-504.6 and 11B-505.*

SECTION 1010
RAMPS

[DSA-AC] *In addition to the requirements of this section, means of egress, which provide access to, or egress from, buildings or facilities where accessibility is required for applications listed in Section 1.9.1 regulated by the Division of the State Architect-Access Compliance, shall also comply with Chapter 11A or Chapter 11B, Section 11B-405, as applicable.*

SECTION 1011
EXIT SIGNS

1011.4 **Raised character and Braille exit signs.** *Tactile exit signs shall be required at the following locations:*

1. *Each grade-level exterior exit door that is required to comply with Section 1011.1, shall be identified by a tactile exit sign with the word, "EXIT."*

2. *Each exit door that is required to comply with Section 1011.1, and that leads directly to a grade-level exterior exit by means of a stairway or ramp shall be identified by a tactile exit sign with the following words as appropriate:*

   2.1. "EXIT STAIR DOWN"

   2.2. "EXIT RAMP DOWN"

   2.3. "EXIT STAIR UP"

   2.4. "EXIT RAMP UP"

3. *Each exit door that is required to comply with Section 1011.1, and that leads directly to a grade-level exterior exit by means of an exit enclosure or an exit passageway shall be identified by a tactile exit sign with the words, "EXIT ROUTE."*

4. *Each exit access door from an interior room or area to a corridor or hallway that is required to comply with Section 1011.1, shall be identified by a tactile exit sign with the words "EXIT ROUTE."*

5. *Each exit door through a horizontal exit that is required to comply with Section 1011.1, shall be identified by a sign with the words, "TO EXIT."*

Raised character and Braille exit signs shall comply with Chapter 11A, Section 1143A or Chapter 11B, Sections 11B-703.1, 11B-703.2, 11B-703.3 and 11B-703.5.

SECTION 1012
HANDRAILS

[DSA-AC] *In addition to the requirements of this section, means of egress, which provide access to, or egress from, buildings or facilities where accessibility is required for applications listed in Section 1.9.1 regulated by the Division of the State Architect-Access Compliance, shall also comply with Chapter 11A or Chapter 11B, Section 11B-505, as applicable.*

SECTION 1013
GUARDS

1013.2 Where required. Guards shall be located along open-sided walking surfaces, including mezzanines, equipment platforms, stairs, ramps and landings that are located more than 30 inches (762 mm) measured vertically to the floor or grade below at any point within 36 inches (914 mm) horizontally to the edge of the open side. Guards shall be adequate in strength and attachment in accordance with Section 1607.8.

Exception: Guards are not required for the following locations:

1. On the loading side of loading docks or piers.
2. On the audience side of stages and raised platforms, including steps leading up to the stage and raised platforms.
3. On raised stage and platform floor areas, such as runways, ramps and side stages used for entertainment or presentations.
4. At vertical openings in the performance area of stages and platforms.
5. At elevated walking surfaces appurtenant to stages and platforms for access to and utilization of special lighting or equipment.
6. Along vehicle service pits not accessible to the public.
7. In assembly seating where guards in accordance with Section 1028.14 are permitted and provided.

1013.3 Height. Required guards shall not be less than 42 inches (1067 mm) high, measured vertically as follows:

1. From the adjacent walking surfaces;
2. On stairs, from the line connecting the leading edges of the tread nosings; and
3. On ramps, from the ramp surface at the guard.

Exceptions:

1. For occupancies in Group R-3, and within individual dwelling units in occupancies in Group R-2, guards on the open sides of stairs shall have a height not less than 34 inches (864 mm) measured vertically from a line connecting the leading edges of the treads.
2. For occupancies in Group R-3, and within individual dwelling units in occupancies in Group R-2, where the top of the guard also serves as a handrail on the open sides of stairs, the top of the guard shall not be less than 34 inches (864 mm) and not more than 38 inches (965 mm) measured vertically from a line connecting the leading edges of the treads.
3. The guard height in assembly seating areas shall comply with Section 1028.14.
4. Along alternating tread devices and ship ladders, guards whose top rail also serves as a handrail, shall have height not less than 30 inches (762 mm) and not more than 34 inches (864 mm), measured vertically from the leading edge of the device tread nosing.

SECTION 1017

AISLES

[DSA-AC] *In addition to the requirements of this section, means of egress, which provide access to, or egress from, buildings or facilities where accessibility is required for applications listed in Section 1.9.1 regulated by the Division of the State Architect-Access Compliance, shall also comply with Chapter 11A or Chapter 11B, Section 11B-403, as applicable.*

1017.3 Aisles in Groups B and M. In Group B and M occupancies, the minimum clear aisle width shall be determined by Section 1005.1 for the occupant load served, but shall not be less than 36 inches (914 mm).

> **Exception:** Nonpublic aisles serving less than 50 people and not required to be accessible by *Chapter 11B (see Section 11B-403)* need not exceed 28 inches (711 mm) in width.

SECTION 1022
INTERIOR EXIT STAIRWAYS AND RAMPS

1022.9 Stairway identification signs. A sign shall be provided at each floor landing in an interior exit stairway and ramp connecting more than three stories designating the floor level, the terminus of the top and bottom of the interior exit stairway and ramp and the identification of the stair or ramp. The signage shall also state the story of, and the direction to, the exit discharge and the availability of roof access from the interior exit stairway and ramp for the fire department. The sign shall be located 5 feet (1524 mm) above the floor landing in a position that is readily visible when the doors are in the open and closed positions.

In addition to the stairway identification sign, raised characters and braille floor identification signs that comply with Chapter 11A, Section 1143A or Chapter 11B. Sections 11B-703.1, 11B-703.2, 11B-703.3 and 11B-703.5 shall be located at the landing of each floor level, placed adjacent to the door on the latch side, in all enclosed stairways in buildings two or more stories in height to identify the floor level. At the exit discharge level, the sign shall include a raised five pointed star located to the left of the identifying floor level. The outside diameter of the star shall be the same as the height of the raised characters.

CHAPTER 11A – MATRIX ADOPTION TABLE

Adopting Agency		DSA	
		AC	SS
Adopt entire California Chapter			
Adopt entire California Chapter as amended (amended sections listed below)			
Adopt only those sections that are listed below		X	
Chapter / Section	Codes		
1128A	CA	X	
1129A	CA	X	
1130A	CA	X	
1131A	CA	X	
1132A	CA	X	
1133A	CA	X	
1134A	CA	X	
1135A	CA	X	
1136A	CA	X	
1150A.1	CA	X	

DIVISION IV – DWELLING UNIT FEATURES

SECTION 1128A
COVERED DWELLING UNITS

1128A.1 General. *Covered multifamily dwelling units shall be adaptable and accessible into and throughout the dwelling unit as provided in this division.*

> ***Note:*** *See Sections 1101A "Application" and 1102A "Building Accessibility" for dwelling units required to comply with this division.*

SECTION 1129A
RESERVED

SECTION 1130A
ACCESSIBLE ROUTE WITHIN COVERED MULTIFAMILY DWELLING UNITS

1130A.1 General. *An accessible route shall be provided through all rooms and spaces of the dwelling unit. The accessible route shall pass through the primary entry door, and shall connect with all additional exterior doors, required clear floor spaces at kitchen appliances and bathroom fixtures. For the purpose of this section, "accessible routes" may include hallways, corridors and ramps.*

> ***Exception:*** *An accessible route is not required from the interior of the unit into a basement or garage, except as provided in Section 1105A.1.*

1130A.2 Width. *The accessible route into and throughout covered multifamily dwelling units shall be at least 36 inches (914 mm) wide.*

SECTION 1131A
CHANGES IN LEVEL ON ACCESSIBLE ROUTES

1131A.1 Changes in level not exceeding ½ inch*. Abrupt changes in level along any accessible route shall not exceed ½ inch (12.7 mm). When changes in level do occur, they shall be beveled with a slope no greater than 1 unit vertical in 2 units horizontal (50-percent slope). Changes in level not exceeding ¼ inch (6.35 mm) may be vertical.*

1131A.2 Changes greater than ½ inch. *Changes in level greater than ½ inch (12.7 mm) shall be made by means of a sloped surface not greater than 1 unit vertical in 20 units horizontal (5-percent slope), or a ramp, elevator or platform (wheelchair) lift. See Section 1122A for ramps and Section 1124A.11 for platform (wheelchair) lifts.*

SECTION 1132A
DOORS

1132A.1 Primary entry doors and required exit doors. *The width and height of primary entry doors and all required exit doors shall comply with Section 1126A.1. The requirements of Sections 1126A.3 shall apply to maneuvering clearances at the side of the door exposed to common or public use spaces (e.g., entry or exit doors which open from the covered multifamily dwelling unit into a corridor, hallway or lobby, or directly to the outside).*

1132A.2 Interior doors and secondary exterior doors. *Except as allowed by Section 1109A.2, interior doors intended for user passage and secondary exterior doors shall comply with this section. The provisions of this section shall apply to the dwelling unit side of doors leading from the interior of the dwelling unit to an unfinished basement or an attached garage.*

1132A.3 Width and height of interior doors and secondary exterior doors. *Doors shall comply with the following:*

1. *Doors shall not be less than 6 feet 8 inches (2032 mm) in height.*
2. *Swinging doors shall provide a net clear opening width of not less than 32 inches (813 mm), measured with the door or doors positioned at an angle of 90 degrees from the closed position.*
3. *Swinging doors shall be capable of opening at least 90 degrees.*
4. *A nominal 32-inch (813 mm) clear opening provided by a standard 6-foot wide (1829 mm) sliding patio door assembly is acceptable.*
5. *A pair of doors, manual or automatic, must have at least one leaf which provides a clear width of not less than 32 inches (813 mm), measured with the door positioned at an angle of 90 degrees from its closed position.*
6. *The width of any component in the means of egress system shall not be less than the minimum width required by Section 1005.*

1132A.4 Level floor or landing. *See also Chapter 10. The floor or landing on each side of a door shall be level. Primary entry doors, required exit doors or secondary exterior doors with changes in height between the interior surface or floor level and the exterior surface or floor level shall comply with the following:*

1. *Exterior landings of impervious construction (e.g., concrete, brick, flagstone) serving primary entry doors and required exit doors are limited to not more than 1/2 inch (12.7 mm) of change in height between floor surfaces. Changes in level shall comply with Section 1131A.*

2. *Exterior landings of pervious construction (e.g., wood decking with spaces) shall be the same level as the interior landing, except that secondary exterior doors may have no more than 1/2 inch (12.7 mm) of change in height between floor surfaces. Changes in level shall comply with Section 1131A.*

3. *Secondary exterior doors onto decks, patios, or balcony surfaces constructed of impervious materials (e.g., concrete, brick, flagstone) may have a maximum change in height from the interior landing of 4 inches (101.6 mm). Changes in height greater than 1/2 inch (12.7 mm) shall be accomplished by means of a ramp complying with Section 1114A or by means of a platform constructed to the level of the floor as illustrated in Figure 11A-8J.*

4. *Secondary exterior doors onto decks, patios or balcony surfaces constructed of impervious materials (e.g., concrete, brick, flagstone) may have a maximum change in height from the interior landing of 1 inch (25.4 mm), provided a ramp with a maximum slope of 1:8 is permanently installed. (See Figure 11A-8K).*

5. *In buildings containing covered multifamily dwelling units, the floor or landing immediately outside the entry may be sloped up to 1/4 inch (6.35 mm) per foot (12 inches) (305 mm), in a direction away from the primary entrance of the dwelling unit for drainage.*

1132A.4.1 Thresholds. *Thresholds at the primary entry and required exit doors shall be no higher than 1/2 inch (12.7 mm). Thresholds at secondary exterior doors, including sliding door tracks, shall be no higher than 3/4 inch (19.05 mm). Changes in height at interior door thresholds (e.g., floor material changes at door thresholds) shall not exceed 1/2 inch (12.7 mm). Thresholds shall comply with the following:*

1. *Thresholds with a change in height of not more than 1/4 inch (6.35 mm) may be vertical.*

2. *Thresholds with a change in height between 1/4 inch (6.35 mm) and 3/4 inch (19.05 mm) shall be beveled with a slope no greater than 1 unit vertical in 2 units horizontal (50-percent slope).*

1132A.5 Maneuvering clearances at doors.

1132A.5.1 General. *The floor or landing on the dwelling unit side of the primary entry door and any required exit door shall have a minimum length of not less than 44 inches (1118 mm). Section 1126A.3 shall apply to maneuvering clearances at the side of the door exposed to common or public use spaces.*

Maneuvering clearances at interior doors shall provide a minimum length on both sides of the door of at least 42 inches (1067 mm) measured at a right angle to the plane of the door in its closed position.

Exception: *A 39-inch (991 mm) length is acceptable at interior doors when a minimum clear opening width of 34 inches (864 mm) is provided.*

1132A.5.2 Strike edge maneuvering space at doors. *The width of the level area on the side to which the door swings shall extend 18 inches (457 mm) past the strike edge for all doors. The width of the level area at the exterior side of the primary entry door and any required exit doors shall comply with Section 1126A.*

Notes:

1. *See Section 1134A for bathrooms that are required to be accessible.*

2. *Twenty-four inches (610 mm) is preferred for strike edge clearance.*

***1132A.6 Closer-effort to operate doors**. Maximum effort to operate doors shall not exceed 8½ pounds (38 N) for exterior doors and 5 pounds (22 N) for interior doors, such pull or push effort being applied at right angles to hinged doors and at the center plane of sliding or folding doors. Compensating devices or automatic door operators may be utilized to meet these standards. When fire doors are required, the maximum effort to operate the door may be increased to the minimum allowable by the appropriate enforcement agency, not to exceed 15 pounds (66.7 N).*

***1132A.7 Type of lock or latch.** The type of latch and lock required for all doors shall be in accordance with Section 1132A.8 and Chapter 10, Section 1008.*

***1132A.8 Hand-activated door hardware.** Hand-activated door latching, locking and opening hardware shall be centered between 30 inches (762 mm) and 44 inches (1118 mm) above the floor. Latching and locking doors that are hand-activated and on an accessible route shall be operable with a single effort by lever-type hardware, panic bars, push-pull activating bars or other hardware designed to provide passage without requiring the ability to grasp the opening hardware. Locked exit doors shall operate consistent with Section 1132A.6, in the direction of egress.*

***1132A.8.1 Lever-type hardware.** The lever or lever of actuated latches or locks shall be curved with a return to within 1/2 inch (12.7 mm) of the door to prevent catching on the clothing of persons during egress in Group R and U Occupancies with an occupant load greater than 10.*

***1132A.9 Smooth surface.** Swinging door or gate surfaces within 10 inches (254 mm) of the finish floor or ground measured vertically shall have a smooth surface on the push side extending the full width of the door or gate. Parts creating horizontal or vertical joints in these surfaces shall be within 1/16 inch (1.6 mm) of the same plane as the other and be free of sharp or abrasive edges. Cavities created by added kick plates shall be capped.*

Exceptions:

1. *Automatic doors.*
2. *Tempered glass doors without stiles and having a bottom rail or shoe with the top leading edge tapered at 60 degrees minimum from the horizontal.*
3. *Doors or gates that do not extend to within 10 inches (254 mm) of the finish floor.*

***1132A.10 Door signal devices.** Every primary entrance to a covered multifamily dwelling unit shall be provided with a door buzzer, bell, chime or equivalent. The activating mechanism shall be mounted a maximum of 48 inches (1219 mm) above the floor and connected to permanent wiring.*

SECTION 1133A
KITCHENS

***1133A.1 General.** Kitchens shall be on an accessible route and shall comply with this section. (See Figure 11A-10A.)*

***1133A.2 Clear floor space.** Clear floor space at kitchens shall comply with the following:*

1. *A clear floor space at least 30 inches (762 mm) by 48 inches (1219 mm) that allows a parallel approach by a person in a wheelchair shall be provided at the range or cooktop.*

2. *A clear floor space at least 30 inches (762 mm) by 48 inches (1219 mm) that allows either a parallel or forward approach shall be provided at the kitchen sink and all other fixtures or appliances including the oven, dishwasher, refrigerator/freezer and trash compactor.*

3. *A clear floor space at least 30 inches (762 mm) by 48 inches (1219 mm) that allows either a parallel or a forward approach shall be provided at the work surface required by Section*

1133A.4.

4. *The centerline of the 30-inch (762 mm) by 48-inch (1219 mm) clear floor space provided for parallel or forward approach shall be aligned with the centerline of the work space, appliance or fixture.*

1133A.2.1 Clear width. *Kitchens shall have a minimum clear width measured between any cabinet, countertop or the face of any appliance (excluding handles and controls) that projects into the kitchen and the opposing cabinet, countertop, appliance or wall as follows:*

1. *U-shaped kitchens, designed with parallel approach at a range or cooktop located at the base of the U, shall have a minimum clear width of at least 60 inches (1524 mm). (See Figure 11A-10A).*

2. *U-shaped kitchens, designed with a cooktop or sink located at the base of the U, which provides a knee and toe space in accordance with Section 1133A.7 to allow for a forward approach, shall have a clear width of at least 48 inches (1219 mm). (See Figure 11A-10A).*

3. *All other kitchen designs shall provide a minimum clear width of at least 48 inches (1219 mm). (See Figure 11A-10A).*

1133A.3 Removable base cabinets. *Sinks and work surfaces required by Section 1133A.4 (see Item 1 and Item 2) shall be provided with knee and toe space complying with Section 1133A.7. Base cabinets (including toeboard and shelving) directly under kitchen sinks and work surfaces shall be removable without the use of specialized tools or specialized knowledge in order to provide knee and toe space. The finish floor beneath kitchen sinks and work surfaces shall be extended to the wall.*

1133A.4 Countertops. *Kitchen countertops shall comply with this section and shall be provided with the following:*

1. *A minimum linear length of 30 inches (762 mm) of countertop shall be provided for the kitchen sink installation.*

2. *A minimum linear length of 30 inches (762 mm) of countertop shall be provided for a work surface.*

3. *Sinks and work surfaces may be a single integral unit a minimum of 60 inches (1524 mm) in length, or be separate components.*

Exception: *Two 15-inch (381 mm) wide minimum breadboards may be provided in lieu of the required 30 inches (762 mm) of countertop work surface.*

1133A.4.1 Repositionable countertops. *Repositionable countertops shall be provided in a minimum of 5 percent of the covered multifamily dwelling units. Repositionable countertops shall comply with the following:*

1. *Sinks and work surfaces required by 1133A.4 shall be designed to enable repositioning to a minimum height of 28 inches (711 mm).*

2. *Base cabinets directly under sinks and work surfaces shall be removable as required in Section 1133A.3.*

3. *The sides of adjacent cabinets and the back wall, which may become exposed to moisture or food handling when a countertop is lowered, shall be constructed of durable, nonabsorbent materials appropriate for such uses.*

4. *Finished flooring shall be extended to the wall beneath the sink and work surface.*

Exceptions:

1. *Stone, cultured stone and tiled countertops may be used without meeting the repositioning requirements.*

2. *Two 15-inch (381 mm) wide minimum breadboards may be provided in lieu of the required 30 inches (762 mm) of countertop work surface, and used without meeting the repositioning requirements.*

1133A.5 Lower shelving. *Lower shelving and/or drawer space shall be provided in the kitchen at a height of no more than 48 inches (1219 mm) above the floor.*

1133A.6 Kitchen sink faucet controls. *Faucet controls and operating mechanisms shall be operable with one hand and shall not require tight grasping, pinching or twisting of the wrist.*

The force required to activate controls shall be no greater than 5 pounds (22.2N). Lever-operated, push-type and electronically controlled mechanisms are examples of acceptable designs. Self-closing valves are allowed if the faucet remains open for at least 10 seconds.

1133A.7 Knee and toe space. *Knee and toe space, when required by Section 1133A, shall comply with Section 1138A.2 and the following:*

1. *The knee and toe space shall be clear and unobstructed, or removable base cabinets in compliance with Section 1133A.3 shall be provided.*

2. *The knee and toe space shall be 30 inches (762 mm) wide minimum, centered on the sink, countertop or appliance.*

3. *A clear floor space shall not extend into the knee and toe space more than 19 inches (483 mm).*

1133A.7.1 Plumbing protection. *Water supply and drain pipes under kitchen sinks shall be insulated or otherwise covered to protect against contact. There shall be no sharp or abrasive surfaces under kitchen sinks.*

SECTION 1134A
BATHING AND TOILET FACILITIES

1134A.1 General. *All bathrooms, bathing and toilet facilities within covered multifamily dwelling units shall comply with this section.*

1134A.2 Number of complying bathrooms. *Bathrooms shall be designed to comply with one of the following options:*

Option 1. *All bathrooms within the dwelling unit shall be designed to comply with the following:*

1. *Toilet, bathing and shower facilities shall comply with Section 1134A.4.*

2. *Bathtubs shall comply with Section 1134A.5.*

3. *Showers shall comply with Section 1134A.6.*

4. *Water closets shall comply with Section 1134A.7.*

5. *Lavatories, vanities, mirrors and towel fixtures shall comply with 1134A.8.*

6. *Bathrooms shall be provided with an accessible route into and through the bathroom.*

7. *If a door is provided, it shall comply with the requirements of Section 1132A.5.*

8. *A minimum 18-inch (457 mm) clear maneuvering space shall be provided on the swing side of the door at the strike edge of the door.*

9. *Switches, outlets and controls shall comply with Section 1142A.*

10. *Reinforced walls to allow for the future installation of grab bars around the toilet, tub and shower shall comply with Sections 1134A.5 for bathtubs, 1134A.6 for showers and 1134A.7 for water closets. Grab bars shall comply with Sections 1127A.4 and 1127A.2.2, Item 4.*

Option 2. *Only one bathroom within the dwelling unit shall be designed to comply with the following:*

1. *Toilet, bathing and shower facilities shall comply with Section 1134A.4.*

2. *Bathtubs shall comply with Section 1134A.5.*

3 *Showers shall comply with Section 1134A.6.*

4. *Water closets shall comply with Section 1134A.7.*

5. *Lavatories, vanities, mirrors and towel fixtures shall comply with 1134A.8.*

6. *Where both a tub and shower are provided in the bathroom, at least one shall be made accessible. Additional requirements apply to dwelling units containing two or more bathrooms when a bathtub is provided as the accessible bathing fixture.*

   Where two or more bathrooms are provided within the same dwelling unit and a bathtub is installed to comply with Option 2, Item 6 in one bathroom and a shower stall is provided in a subsequent bathroom, both the bathtub selected to comply with Option 2, Item 6 and at least one shower stall within the dwelling unit shall meet all the applicable accessibility requirements provided in Section 1134A. (See Section 1134A.5 for bathtubs, or Section 1134A.6 for showers.)

7. *When two or more lavatories are provided, at least one shall be made accessible and comply with Section 1134A.8.*

8. *Bathrooms shall be provided with an accessible route into and through the bathroom.*

9. *If a door is provided, it shall comply with the requirements of Section 1132A.5.*

10. *A minimum 18-inch (457 mm) clear maneuvering space shall be provided on the swing side of the door at the strike edge of the door.*

11. *Switches, outlets and controls shall comply with Section 1142A.*

12. *Reinforced walls to allow for the future installation of grab bars around the toilet, tub and shower shall comply with Sections 1134A.5 for bathtubs, 1134A.6 for showers and 1134A.7 for water closets. Grab bars shall comply with Sections 1127A.4 and 1127A.2.2, Item 4.*

When Option 2 is used, all additional bathrooms must comply with Items 8 through 12 above.

***1134A.3 Powder rooms**. All powder rooms shall be designed to comply with Section 1134A.2, Option 2, Items 8 through 12. When the powder room is the only toilet facility located on an accessible level, it shall comply with the Option 2 Items listed above, plus all additional requirements located in Sections 1134A.4, 1134A.7 and 1134A.8.*

***1134A.4 Sufficient maneuvering space.** Bathing and toilet facilities required to be adaptable shall provide sufficient maneuvering space for a person using a wheelchair or other mobility aid to enter and close the door, use the fixtures, reopen the door and exit.*

Where the door swings into the bathroom or powder room, there shall be a clear maneuvering space outside the swing of the door of at least 30 inches by 48 inches (762 mm by 1219 mm) within the room. The clear maneuvering space shall allow the user to position a wheelchair or other mobility aid clear of the path of the door as it is closed and to permit use of fixtures.

Doors may swing into the required clear space at any fixture when a clear maneuvering space is provided outside the swing arc of the door so it can be closed.

Maneuvering spaces may include any knee space or toe space available below bathroom fixtures.

***1134A.5 Bathtubs.** Bathtubs required to be accessible shall comply with this section.*

1. ***Floor space.** There shall be a minimum clear floor space 48 inches parallel by 30 inches perpendicular (1219 mm by 762 mm) to the side of a bathtub or bathtub-shower combination to provide for the maneuvering of a wheelchair and transfer to and from the bathing facilities. The controls shall be on the wall at the foot of the bathtub. The edge of the clear floor space shall be flush with the control wall surface. The area under a lavatory, located at the control end of the tub, may be included in the clear floor space provided the lavatory is 19 inches (483 mm) maximum deep, and the knee and toe space comply with Section 1134A.8. Cabinets under lavatories and toilets shall not encroach into the clear floor space.*

2. ***Reinforced walls for grab bars.** A bathtub installed without surrounding walls shall provide reinforced areas for the installation of floor-mounted grab bars.*

   Where a bathtub is installed with surrounding walls, grab bar reinforcement shall be located on each end of the bathtub, 32 inches to 38 inches (813 mm to 965 mm) above the floor, extending a minimum of 24 inches (610 mm) from the front edge of the bathtub toward the back wall of the bathtub. The grab bar reinforcement shall be a minimum of 6 inches (152.4 mm) nominal in height. (See Figure 11A-9G).

   Grab bar reinforcement shall be installed on the back wall of the bathtub a maximum of 6 inches (152.4 mm) above the bathtub rim extending upward to at least 38 inches (965 mm) above the floor. Grab bar backing shall be installed horizontally to permit the installation of a 48-inch (1219 mm) grab bar with each end a maximum of 6 inches (152.4 mm) from the end walls of the bathtub. The grab bar reinforcement shall be a minimum of 6 inches (152.4 mm) nominal in height.

3. ***Bathtub controls.** Faucet controls and operation mechanisms shall be operable with one hand and shall not require tight grasping, pinching or twisting of the wrist.*

   The force required to activate controls shall be no greater than 5 pounds (22.2N). Lever operated, push type and electronically controlled mechanisms are examples of acceptable designs.

4. ***Shower unit.** A shower spray unit is not required in bathtubs.*

5. ***Bathtub enclosures.** Doors and panels of bathtub enclosures shall be substantially constructed from approved, shatter-resistant materials. Hinged doors shall open outward. Glazing used in doors and panels of bathtub enclosures shall be fully tempered, laminated*

safety glass or approved plastic. When glass is used, it shall have minimum thickness of not less than 1/8 inch (3.17 mm) when fully tempered, or 1/4 inch (6.35 mm) when laminated, and shall pass the test requirements of this part, Chapter 24 Glass and Glazing. Plastics used in doors and panels of bathtub enclosures shall be of a shatter-resistant type.

1134A.6 Showers. *Showers required to be accessible shall comply with this section.*

1. ***Size.*** *When one or more shower stalls are provided within the same dwelling unit, at least one shower stall shall comply with one of the following requirements.*

   1.1 The shower stall shall measure at least 42 inches wide by 48 inches deep (1067 mm by 1219 mm) with an entrance opening of at least 36 inches (914 mm) or;

   1.2 The shower stall shall measure at least 30 inches deep by 60 inches wide (762 mm by 1524 mm) with an entrance opening of at least 60 inches (1524 mm). A water closet may project a maximum of 12 inches (305 mm) into the opening provided that a minimum of 36 inches (914 mm) clear space is maintained between the water closet and the shower wall as illustrated in Figure 11A-9L or;

   1.3 Other shower stall configurations shall measure at least 36 inches deep by 60 inches wide (914 mm by 1524 mm) with an entrance opening of at least 36 inches (914 mm) when a wall is installed on the opening side.

2. ***Slope.*** *The maximum slope of the shower floor shall be ½ inch (12.7 mm) per foot in any direction and shall slope to a drain. The floor surfaces shall be of Carborundum or grit-faced tile or of material providing equivalent slip resistance.*

3. ***Floor space.*** *A clear maneuvering space at least 30 inches in width by 48 inches in length (762 mm by 1219 mm) shall be located outside the shower, flush and parallel to the control wall.*

4. ***Reinforced walls for grab bars.*** *Grab bar reinforcement shall be installed continuous in the walls of showers 32 inches to 38 inches (813 mm to 965 mm) above the floor. The grab bar reinforcement shall be a minimum of 6 inches (152.4 mm) nominal in height.*

   Glass-walled shower stalls shall provide reinforcement for installation of floor-mounted or ceiling-mounted grab bars.

5. ***Thresholds.*** *When a threshold is used, it shall be a maximum of 2 inches (50.8 mm) in height and have a beveled or sloped angle not exceeding 1 unit vertical in 2 units horizontal (26.6 degrees from the horizontal). Thresholds 1/2 inch (12.7 mm) or less in height may have a beveled or sloped angle not exceeding 1 unit vertical in 1 unit horizontal (45 degrees from the horizontal).*

6. ***Shower controls.*** *Faucet controls and operation mechanisms shall be operable with one hand and shall not require tight grasping, pinching or twisting of the wrist. The force required to activate controls shall be no greater than 5 pounds (22.2 N). Lever operated, push-type and electronically controlled mechanisms are examples of acceptable designs.*

7. ***Shower enclosures.*** *Doors and panels of shower enclosures shall be substantially constructed from approved, shatter-resistant materials. Hinged shower doors shall open outward. Glazing used in doors and panels of shower enclosures shall be fully tempered, laminated safety glass or approved plastic. When glass is used, it shall have minimum thickness of not less than 1/8 inch (3.17 mm) when fully tempered, or ¼ inch (6.35 mm) when laminated, and shall pass the test requirements of this part, Chapter 24, Glass and Glazing. Plastics used in doors and panels of shower enclosures shall be of a shatter-resistant type.*

1134A.7 Water closets. *Water closets in bathrooms or powder rooms required to be accessible shall*

comply with this section.

1. ***Floor space and location.*** *The minimum floor space provided at a water closet shall be 48 inches (1219 mm) in clear width. The clear floor space shall extend past the front edge of the water closet at least 36 inches (914 mm). See Figure 11A-9M.*

   Exception*: The 48-inch (1219 mm) minimum clear width may be reduced to 36 inches (914 mm) for lavatories, cabinets, wing walls, or privacy walls located immediately adjacent to a water closet which extend no more than 24 inches (610 mm) in depth.*

   Water closets shall be located within bathrooms in a manner that permits a grab bar to be installed on at least one side of the fixture. The centerline of the water closet shall be 17 inches (432 mm) minimum to 18 inches (457 mm) maximum from a grab bar wall or partition. In locations where water closets are adjacent to non-grab bar walls, vanities, lavatories or bathtubs, the centerline of the fixture shall be a minimum of 18 inches (457 mm) from the obstacle.

2. ***Reinforced walls for grab bars.*** *Where the water closet is not placed adjacent to a side wall capable of accommodating a grab bar, the bathroom shall have provisions for installation of floor-mounted, foldaway or similar alternative grab bars.*

   Where the water closet is placed adjacent to a side wall, reinforcement shall be installed on both sides or one side and the back. If reinforcement is installed at the back, it shall be installed between 32 inches (813 mm) and 38 inches (965 mm) above the floor. The grab bar reinforcement shall be a minimum of 6 inches (152.4 mm) nominal in height. The backing shall be a minimum of 40 inches (1016 mm) in length.

   Reinforcement installed at the side of the water closet shall be installed 32 inches to 38 inches (813 mm to 965 mm) above the floor. The reinforcement shall be installed a maximum of 12 inches (305 mm) from the rear wall and shall extend a minimum of 26 inches (660 mm) in front of the water closet. The grab bar reinforcement shall be a minimum of 6 inches (152.4 mm) nominal in height.

3. ***Seat height.*** *The minimum height of water closet seats shall be 15 inches (381 mm) above the floor.*

4. ***Water closet controls.*** *Water closet controls shall be mounted no more than 44 inches (1118 mm) above the floor. The force required to activate controls shall be no greater than 5 pounds (22.2 N).*

1134A.8 Lavatories, vanities, mirrors and towel fixtures*. Bathrooms or powder rooms required to be accessible shall have at least one accessible lavatory. Where mirrors and towel fixtures are provided, at least one of each shall be accessible.*

1. ***Location.*** *Vanities and lavatories shall be installed with the centerline of the fixture a minimum of 18 inches (457 mm) horizontally from an adjoining wall or fixture to allow for forward approach. When parallel approach is provided, lavatories shall be installed with the centerline of the fixture a minimum of 24 inches (610 mm) horizontally from an adjoining wall or fixture. The top of the fixture rim shall be a maximum of 34 inches (864 mm) above the finished floor.*

2. ***Floor space.*** *A clear maneuvering space at least 30 inches by 48 inches (762 mm by 1219 mm) shall be provided at lavatories and shall be centered on the lavatory.*

3. ***Cabinets.*** *Cabinets under lavatories are acceptable provided the bathroom has space to allow a parallel approach by a person in a wheelchair and the lavatory cabinets are designed with adaptable knee and toe space.*

4. ***Knee and toe space.*** *Knee and toe space shall be provided by one of the following:*

4.1. The space beneath the lavatory shall be left clear and unobstructed;

4.2. Any cabinet beneath the lavatory shall be removable without the use of specialized knowledge or specialized tools; or

4.3. Doors to the cabinet beneath the lavatory shall be removable or openable to provide the required unobstructed knee and toe space.

The knee and toe space shall be centered on the fixture, and shall comply with Section 1138A.2. The clear floor space required by Item 2 shall not extend into the knee and toe space more than 19 inches (483 mm). (See Figure 11A-9D).

5. ***Finished floor.*** *The finished floor beneath the lavatory shall be extended to the wall.*

6. ***Plumbing protection.*** *Water supply and drain pipes under lavatories shall be insulated or otherwise covered to protect against contact. There shall be no sharp or abrasive surfaces under lavatories.*

7. ***Lavatory faucet controls.*** *Faucet controls and operation mechanisms shall be operable with one hand and shall not require tight grasping, pinching or twisting of the wrist.*

   The force required to activate controls shall be no greater than 5 pounds (22.2 N). Lever operated, push-type and electronically controlled mechanisms are examples of acceptable designs. Self-closing valves are allowed if the faucet remains open for at least 10 seconds.

8. ***Mirrors and towel fixtures.*** *Where mirrors or towel fixtures are provided they shall be mounted with the bottom edge no higher than 40 inches (1016 mm) from the floor.*

SECTION 1135A
LAUNDRY ROOMS

1135A.1 General. *If clothes washing machines and clothes dryers are provided in covered multifamily dwelling units, one of each type of appliance shall be provided. Where front-loading clothes washers are not provided, management shall provide assistive devices, on request of the occupant, to permit the use of top-loading clothes washers.*

SECTION 1136A
ELECTRICAL RECEPTACLE, SWITCH AND CONTROL HEIGHTS

1136A.1 Receptacle heights. *Electrical receptacle outlets on branch circuits of 30 amperes or less and communication system receptacles shall be located no more than 48 inches (1219 mm) measured from the top of the receptacle outlet box nor less than 15 inches (381 mm) measured from the bottom of the receptacle outlet box to the level of the finished floor or working platform. If the reach is over a physical barrier or an obstruction (for example, a kitchen base cabinet), receptacles shall be located within the reach ranges specified in Section 1138A.3. Physical barriers and obstructions shall not extend more than 25 inches (635 mm) from the wall beneath the receptacle.*

Receptacle outlets that do not satisfy these specifications are acceptable provided that comparable receptacle outlets, that perform the same functions, are provided within the same area and are accessible.

Exceptions:

1. *Receptacle outlets installed as part of permanently installed baseboard heaters are exempt.*

2. *Required receptacle outlets shall be permitted in floors when adjacent to sliding panels or walls.*

3. *Baseboard electrical outlets used in relocatable partitions, window walls or other electrical convenience floor outlets are not subject to the minimum height requirements.*

4. *This section shall not apply to existing buildings when the enforcing agency determines that compliance with these standards would create an unreasonable hardship.*

1136A.2 Switch and control heights. *Controls or switches intended to be used by the occupant of the room or area to control lighting and receptacle outlets, appliances, alarms or cooling, heating and ventilating equipment shall be located no more than 48 inches (1219 mm) measured from the top of the outlet box nor less than 15 inches (381 mm) measured from the bottom of the outlet box to the level of the finished floor or working platform. If the reach is over a physical barrier or an obstruction (for example, a kitchen base cabinet) switches and controls shall be located within the reach ranges specified in Section 1138A.3. Physical barriers or obstructions shall not extend more than 25 inches (635 mm) from the wall beneath a control.*

Switches and controls that do not satisfy these specifications are acceptable provided that comparable controls or outlets, that perform the same functions, are provided within the same area and are accessible.

Exception: *Appliances (e.g., kitchen stoves, dishwashers, range hoods, microwave ovens and similar appliances) which have controls located on the appliance.*

DIVISION IV – SITE IMPRACTICALITY TESTS

SECTION 1150A
SITE IMPRACTICALITY TESTS

1150A.1 General. *Covered multifamily dwellings in buildings without an elevator, located on sites with difficult terrain conditions or unusual characteristics, may employ the site impracticality tests in this division for determining the accessibility and adaptability provisions required by this chapter.*

Except as provided for in Section 1102A.3.1, the provisions of this section do not apply to multistory dwelling units in nonelevator buildings.

SINGLE BUILDING WITH ONE COMMON (LOBBY) ENTRANCE

The following may only be used for determining required access to covered multifamily dwelling units, in a single building with one common (lobby) entrance, located on a site with difficult terrain conditions or unusual characteristics:

All ground floor units in nonelevator buildings shall be adaptable and on an accessible route unless an accessible route to the common (lobby) entrance is not required as determined by Test No. 1, Individual Building Test, or Test No. 3, Unusual Characteristics Test, as described in this section.

Sites where either Test No. 1 or Test No. 3 is used and it is determined that an accessible route to the common (lobby) entrance is not required, at least 20 percent of the ground floor dwelling units shall comply with Division IV, and all remaining ground floor dwelling units shall comply with the features listed in Section 1150A.2 unless exempted by Test No. 3, Unusual Characteristics Test.

Test No. 1 -- Individual Building Test may only be used if the site has terrain over 15 percent slope.

Test No. 3 -- Unusual Characteristics Test may be used if applicable.

Provisions to Test Nos. 1 and 2. *Where a building elevator is provided only as means of creating an accessible route to covered multifamily dwelling units on a ground floor, the building is not considered to be an elevator building for purposes of this code; hence, only the ground floor dwelling units would be covered.*

TEST NO. 1 – INDIVIDUAL BUILDING TEST

It is not required by this code to provide an accessible route when the terrain of the site is such that both of the following apply:

1. *The slopes of the undisturbed site measured between the planned entrance and all vehicular or pedestrian arrival points within 50 feet (15 240 mm) of the planned entrance exceed 15 percent**;** and*

2. *The slopes of the planned finished grade measured between the entrance and all vehicular or pedestrian arrival points within 50 feet (15 240 mm) of the planned entrance also exceed 15 percent.*

If there are no vehicular or pedestrian arrival points within 50 feet (15 240 mm) of the planned entrance, the slope for the purposes of Test No. 1 will be measured to the closest vehicular or pedestrian arrival point.

For purposes of these requirements, vehicular or pedestrian arrival points include public or resident parking areas, public transportation stops, passenger loading zones and public streets or sidewalks. To determine site impracticality, the slope would be measured at ground level from the point of the planned entrance on a straight line to (1) each vehicular or pedestrian arrival point that is within 50 feet (15 240 mm) of the planned entrance, or (2) if there are no vehicular or pedestrian arrival points within the specified area, the vehicular or pedestrian arrival point closest to the planned entrance. In the case of sidewalks, the closest point to the entrance will be where a public sidewalk entering the site intersects with the walk to the entrance. In the case of resident parking areas, the closest point to the planned entrance will be measured from the entry point to the parking area that is located closest to the planned entrance.

TEST NO. 2 – SITE ANALYSIS TEST

For a site having multiple buildings, or a site with a single building with multiple entrances, it is not required to provide an accessible route to all ground floor units under the following conditions:

1. *Calculate the percentage of the total buildable area of the undisturbed site with a natural grade less than 10- percent slope. The analysis of the existing slope (before grading) shall be done on a topographic survey with 2-foot (610 mm) contour intervals with slope determination made between each successive interval. The accuracy of the slope analysis shall be certified by a licensed engineer, landscape architect, architect or surveyor.*

2. *Determine the requirement of providing an accessible route to planned multifamily dwellings based on the topography of the existing natural terrain. The minimum percentage of ground floor units required on an accessible route shall equal the percentage of the total buildable area (not restricted-use areas) of the undisturbed site with an existing natural grade of less than 10-percent slope. In no case shall less than 20 percent of the ground floor dwelling units be on an accessible route and comply with the provisions of Division IV.*

3. *In addition to the percentage established in paragraph (2), all additional ground floor units in a*

building, or ground floor units served by a particular entrance, that fall within an 8.33-percent slope between their planned entrances and an arrival point, shall be on an accessible route and comply with the provisions of Division IV.

4. *All additional ground floor units in a building, or ground floor units served by a particular entrance, not on an accessible route shall comply with the features listed in Section 1150A.2.*

TEST NO. 3 – UNUSUAL CHARACTERISTICS TEST

Unusual characteristics include sites located in a state or federally designated floodplain or coastal high-hazard areas and sites subject to other similar requirements of law or code that require the lowest floor or the lowest structural member of the lowest floor be designed to a specified level at or above the base flood elevation. An accessible route to a building entrance is impractical due to unusual characteristics of the site when:

1. *The original site characteristics result in a difference in finished grade elevation exceeding 30 inches (762 mm) and 10 percent measured between an entrance and all vehicular or pedestrian arrival points within 50 feet (15 240 mm) of the planned entrance; or*

2. *If there are no vehicular or pedestrian arrival points within 50 feet (15 240 mm) of the planned entrance, the unusual characteristics result in a difference in finished grade elevation exceeding 30 inches (762 mm) and 10 percent measured between an entrance and the closest vehicular or pedestrian arrival point.*

CHAPTER 11B
ACCESSIBILITY TO PUBLIC BUILDINGS, PUBLIC ACCOMMODATIONS, COMMERCIAL BUILDINGS AND PUBLIC HOUSING

CHAPTER 11B – MATRIX ADOPTION TABLE

Adopting Agency		DSA	
		AC	SS
Adopt entire California Chapter		X	
Adopt entire California Chapter as amended (amended sections listed below)			
Adopt only those sections that are listed below			
Chapter / Section	Codes		

Division 1: Application and Administration

11B-101	**Purpose**
11B-101.1	General
11B-101.2	Reserved
11B-102	**Dimensions for Adults and Children**
11B-103	**Equivalent Facilitation**
11B-104	**Conventions**
11B-104.1	Dimensions
11B-104.2	Calculation of Percentages
11B-104.3	Figures
11B-105	**Referenced Standards**
11B-105.1	General
11B-106	**Definitions**
11B-106.1	General
11B-106.2	Terms Defined in Referenced Standards
11B-106.3	Undefined Terms
11B-106.4	Interchangeability
11B-106.5	Defined Terms
11B-107	**Special Conditions Appeals Action**
	See Chapter 1, Section 1.9.1.5.
11B-108	**Maintenance of Accessible Features**

Division 2: Scoping Requirements

11B-201	**Application**
11B-201.1	Scope
11B-201.2	Application Based on Building or Facility Use
11B-201.3	Temporary and Permanent Structures
11B-201.4	Construction Support Facilities
11B-202	**Existing Buildings and Facilities**
11B-202.1	General
11B-202.2	Additions

11B-202.3	Alterations
11B-202.4	Path of Travel Requirements in Alterations, Additions and Structural Repairs
11B-202.5	Alterations to Qualified Historic Buildings and Facilities
11B-203	**General Exceptions**
11B-203.1	General
11B-203.2	Construction Sites
11B-203.3	Raised Areas
11B-203.4	Limited Access Spaces
11B-203.5	Machinery Spaces
11B-203.6	Single Occupant Structures
11B-203.7	Detention and Correctional Facilities
11B-203.8	Residential Facilities
11B-203.9	Employee Work Areas
11B-203.10	Raised Refereeing, Judging, and Scoring Areas
11B-203.11	Water Slides
11B-203.12	Animal Containment Areas
11B-203.13	Raised Boxing or Wrestling Rings
11B-203.14	Raised Diving Boards and Diving Platforms
11B-204	**Protruding Objects**
11B-204.1	General
11B-205	**Operable Parts**
11B-205.1	General
11B-206	**Accessible Routes**
11B-206.1	General
11B-206.2	Where Required
11B-206.3	Location
11B-206.4	Entrances
11B-206.5	Doors, Doorways, and Gates
11B-206.6	Elevators
11B-206.7	Platform Lifts
11B-206.8	Security Barriers
11B-207	**Accessible Means of Egress**
11B-207.1	General
11B-207.2	Platform Lifts
11B-208	**Parking Spaces**
11B-208.1	General
11B-208.2	Minimum Number
11B-208.3	Location
11B-209	**Passenger Loading Zones and Bus Stops**
11B-209.1	General
11B-209.2	Type
11B-209.3	Medical Care and Long-Term Care Facilities
11B-209.4	Valet Parking
11B-209.5	Mechanical Access Parking Garages
11B-210	**Stairways**
11B-210.1	General
11B-211	**Drinking Fountains**
11B-211.1	General
11B-211.2	Minimum Number
11B-211.3	More Than Minimum Number

11B-212 **Kitchens, Kitchenettes, Wet Bars and Sinks**
11B-212.1 General
11B-212.2 Kitchens, Kitchenettes, and Wet Bars
11B-212.3 Sinks
11B-213 **Toilet Facilities and Bathing Facilities**
11B-213.1 General
11B-213.2 Toilet Rooms and Bathing Rooms
11B-213.3 Plumbing Fixtures and Accessories
11B-214 **Washing Machines and Clothes Dryers**
11B-214.1 General
11B-214.2 Washing Machines
11B-214.3 Clothes Dryers
11B-215 **Fire Alarm Systems and Carbon Monoxide Alarm Systems**
11B-215.1 General
11B-215.2 Public and Common Use Areas
11B-215.3 Employee Work Areas
11B-215.4 Transient Lodging
11B-215.5 Residential Facilities
11B-216 **Signs**
11B-216.1 General
11B-216.2 Designations
11B-216.3 Directional and Informational Signs
11B-216.4 Means of Egress
11B-216.5 Parking
11B-216.6 Entrances
11B-216.7 Elevators
11B-216.8 Toilet Rooms and Bathing Rooms
11B-216.9 TTYs
11B-216.10 Assistive Listening Systems
11B-216.11 Check-Out Aisles
11B-216.12 Amusement Rides
11B-216.13 Cleaner Air Symbol
11B-216.14 Variable Message Signs
11B-217 **Telephones**
11B-217.1 General
11B-217.2 Wheelchair Accessible Telephones
11B-217.3 Volume Controls
11B-217.4 TTYs
11B-217.5 Shelves for Portable TTYs
11B-218 **Transportation Facilities**
11B-218.1 General
11B-218.2 New and Altered Fixed Guideway Stations
11B-218.3 Key Stations and Existing Intercity Rail Stations
11B-218.4 Bus Shelters
11B-218.5 Other Transportation Facilities
11B-219 **Assistive Listening Systems**
11B-219.1 General
11B-219.2 Required Systems
11B-219.3 Receivers
11B-219.4 Location
11B-219.5 Permanent and Portable Systems

11B-220 **Automatic Teller Machines, Fare Machines and Point-of-Sale Machines**
11B-220.1 Automatic Teller Machines and Fare Machines
11B-220.2 Point-of-Sale Devices
11B-221 **Assembly Areas**
11B-221.1 General
11B-221.2 Wheelchair Spaces
11B-221.3 Companion Seats
11B-221.4 Designated Aisle Seats
11B-221.5 Lawn Seating
11B-221.6 Semi-Ambulant Seats
11B-222 **Dressing, Fitting and Locker Rooms**
11B-222.1 General
11B-222.2 Coat Hooks and Shelves
11B-222.3 Mirrors
11B-223 **Medical Care and Long-Term Care Facilities**
11B-223.1 General
11B-223.2 Hospitals, Rehabilitation Facilities, Psychiatric Facilities and Detoxification Facilities
11B-223.3 Long-Term Care Facilities
11B-223.4 Professional Offices of Health Care Providers
11B-224 **Transient Lodging Guest Rooms, Housing at a Place of Education and Social Service Center Establishments**
11B-224.1 General
11B-224.2 Guest Rooms with Mobility Features
11B-224.3 Beds
11B-224.4 Guest Rooms with Communication Features
11B-224.5 Dispersion
11B-224.6 Storage
11B-224.7 Housing at a Place of Education
11B-224.8 Social Service Center Establishments
11B-225 **Storage**
11B-225.1 General
11B-225.2 Storage
11B-225.3 Self-Service Storage Facilities
11B-226 **Dining Surfaces and Work Surfaces**
11B-226.1 General
11B-226.2 Dispersion
11B-226.3 Dining Surfaces Exceeding 34 Inches in Height
11B-226.4 Baby Changing Tables
11B-227 **Sales and Service**
11B-227.1 General
11B-227.2 Check-Out Aisles
11B-227.3 Counters
11B-227.4 Food Service Lines
11B-227.5 Queues and Waiting Lines
11B-228 **Depositories, Vending Machines, Change Machines, Mail Boxes and Fuel Dispensers**
11B-228.1 General
11B-228.2 Mail Boxes

11B-229 **Windows**
11B-229.1 General
11B-230 **Two-Way Communication Systems**
11B-230.1 General
11B-231 **Judicial Facilities**
11B-231.1 General
11B-231.2 Courtrooms
11B-231.3 Holding Cells
11B-231.4 Visiting Areas
11B-232 **Detention Facilities and Correctional Facilities**
11B-232.1 General
11B-232.2 General Holding Cells and General Housing Cells
11B-232.3 Special Holding Cells and Special Housing Cells
11B-232.4 Medical Care Facilities
11B-232.5 Visiting Areas
11B-233 **Residential Facilities**
11B-233.1 General
11B-233.2 Reserved
11B-233.3 Public Housing Facilities
11B-234 **Amusement Rides**
11B-234.1 General
11B-234.2 Load and Unload Areas
11B-234.3 Minimum Number
11B-234.4 Existing Amusement Rides
11B-235 **Recreational Boating Facilities**
11B-235.1 General
11B-235.2 Boat Slips
11B-235.3 Boarding Piers at Boat Launch Ramps
11B-236 **Exercise Machines and Equipment**
11B-236.1 General
11B-237 **Fishing Piers and Platforms**
11B-237.1 General
11B-238 **Golf Facilities**
11B-238.1 General
11B-238.2 Golf Courses
11B-238.3 Practice Putting Greens, Practice Teeing Grounds and Teeing Stations at Driving Ranges
11B-239 **Miniature Golf Facilities**
11B-239.1 General
11B-239.2 Minimum Number
11B-239.3 Miniature Golf Course Configuration
11B-240 **Play Areas**
11B-240.1 General
11B-240.2 Play Components
11B-241 **Saunas and Steam Rooms**
11B-241.1 General
11B-242 **Swimming Pools, Wading Pools, and Spas**
11B-242.1 General
11B-242.2 Swimming Pools
11B-242.3 Wading Pools

11B-242.4 Spas
11B-243 Shooting Facilities with Firing Positions
11B-243.1 General
11B-244 Religious Facilities
11B-244.1 General
11B-245 Commercial Facilities Located in Private Residences
11B-245.1 General
11B-245.2 Application
11B-245.3 Accessible Elements Required
11B-246 Outdoor Developed Areas
11B-246.1 General
11B-246.2 Camping Facilities
11B-246.3 Beaches
11B-246.4 Day Use Areas and Vista Points
11B-246.5 Picnic Areas
11B-246.6 Parking Lots
11B-246.7 Trails and Paths
11B-246.8 Nature Trails
11B-247 Detectable Warnings and Detectable Directional Warning Texture
11B-247.1 Detectable Warnings
11B-247.2 Detectable Directional Texture

Division 3: Building Blocks

11B-301 General
11B-301.1 Scope
11B-302 Floor or Ground Surfaces
11B-302.1 General
11B-302.2 Carpet
11B-302.3 Openings
11B-303 Changes in Level
11B-303.1 General
11B-303.2 Vertical
11B-303.3 Beveled
11B-303.4 Ramps
11B-303.5 Warning Curbs
11B-304 Turning Space
11B-304.1 General
11B-304.2 Floor or Ground Surfaces
11B-304.3 Size
11B-304.4 Door Swing
11B-305 Clear Floor or Ground Space
11B-305.1 General
11B-305.2 Floor or Ground Surfaces
11B-305.3 Size
11B-305.4 Knee and Toe Clearance
11B-305.5 Position
11B-305.6 Approach
11B-305.7 Maneuvering Clearance
11B-306 Knee and Toe Clearance
11B-306.1 General

11B-306.2 Toe Clearance
11B-306.3 Knee Clearance
11B-307 Protruding Objects
11B-307.1 General
11B-307.2 Protrusion Limits
11B-307.3 Post-Mounted Objects
11B-307.4 Vertical Clearance
11B-307.5 Required Clear Width
11B-308 Reach Ranges
11B-308.1 General
11B-308.2 Forward Reach
11B-308.3 Side Reach
11B-309 Operable Parts
11B-309.1 General
11B-309.2 Clear Floor Space
11B-309.3 Height
11B-309.4 Operation

Division 4: Accessible Routes
11B-401 General
11B-401.1 Scope
11B-402 Accessible Routes
11B-402.1 General
11B-402.2 Components
11B-403 Walking Surfaces
11B-403.1 General
11B-403.2 Floor or Ground Surface
11B-403.3 Slope
11B-403.4 Changes in Level
11B-403.5 Clearances
11B-403.6 Handrails
11B-403.7 Continuous Gradient
11B-404 Doors, Doorways, and Gates
11B-404.1 General
11B-404.2 Manual Doors, Doorways, and Manual Gates
11B-404.3 Automatic and Power-Assisted Doors and Gates
11B-405 Ramps
11B-405.1 General
11B-405.2 Slope
11B-405.3 Cross Slope
11B-405.4 Floor or Ground Surfaces
11B-405.5 Clear Width
11B-405.6 Rise
11B-405.7 Landings
11B-405.8 Handrails
11B-405.9 Edge Protection
11B-405.10 Wet Conditions
11B-406 Curb Ramps, Blended Transitions and Islands
11B-406.1 General
11B-406.2 Perpendicular Curb Ramps
11B-406.3 Parallel Curb Ramps

11B-406.4 Blended Transitions
11B-406.5 Common Requirements
11B-406.6 Islands
11B-407 Elevators
11B-407.1 General
11B-407.2 Elevator Landing Requirements
11B-407.3 Elevator Door Requirements
11B-407.4 Elevator Car Requirements
11B-408 Limited-Use/Limited-Application Elevators
11B-408.1 General
11B-408.2 Elevator Landings
11B-408.3 Elevator Doors
11B-408.4 Elevator Cars
11B-409 Private Residence Elevators
11B-409.1 General
11B-409.2 Call Buttons
11B-409.3 Elevator Doors
11B-409.4 Elevator Cars
11B-410 Platform Lifts
11B-410.1 General
11B-410.2 Floor Surfaces
11B-410.3 Clear Floor Space
11B-410.4 Platform to Runway Clearance
11B-410.5 Operable Parts
11B-410.6 Doors and Gates
11B-410.7 Landing Size
11B-410.8 Restriction Sign
11B-411 Destination-Oriented Elevators
11B-411.1 General
11B-411.2 Elevator Landing Requirements
11B-411.3 Elevator Door Requirements
11B-411.4 Elevator Car Requirements

Division 5: General Site and Building Elements
11B-501 General
11B-501.1 Scope
11B-502 Parking Spaces
11B-502.1 General
11B-502.2 Vehicle Spaces
11B-502.3 Access Aisle
11B-502.4 Floor or Ground Surfaces
11B-502.5 Vertical Clearance
11B-502.6 Identification
11B-502.7 Relationship to Accessible Routes
11B-502.8 Additional Signage
11B-503 Passenger Drop-Off and Loading Zones
11B-503.1 General
11B-503.2 Vehicle Pull-Up Space
11B-503.3 Access Aisle
11B-503.4 Floor and Ground Surfaces
11B-503.5 Vertical Clearance

11B-503.6 Identification
11B-504 Stairways
11B-504.1 General
11B-504.2 Treads and Risers
11B-504.3 Open Risers
11B-504.4 Tread Surface
11B-504.5 Nosings
11B-504.6 Handrails
11B-504.7 Wet Conditions
11B-504.8 Floor Identification
11B-505 Handrails
11B-505.1 General
11B-505.2 Where Required
11B-505.3 Continuity
11B-505.4 Height
11B-505.5 Clearance
11B-505.6 Gripping Surface
11B-505.7 Cross Section
11B-505.8 Surfaces
11B-505.9 Fitting
11B-505.10 Handrail Extensions

Division 6: Plumbing Elements and Facilities

11B-601 General
11B-601.1 Scope
11B-602 Drinking Fountains
11B-602.1 General
11B-602.2 Clear Floor Space
11B-602.3 Operable Parts
11B-602.4 Spout Height
11B-605.5 Spout Location
11B-602.6 Water Flow
11B-602.7 Drinking Fountains for Standing Persons
11B-602.8 Depth
11B-602.9 Pedestrian Protection
11B-603 Toilet and Bathing Rooms
11B-603.1 General
11B-603.2 Clearances
11B-603.3 Mirrors
11B-604.4 Seats
11B-603.4 Coat Hooks, Shelves and Medicine Cabinets
11B-603.5 Accessories
11B-603.6 Guest Room Toilet and Bathing Rooms
11B-604 Water Closets and Toilet Compartments
11B-604.1 General
11B-604.2 Location
11B-604.3 Clearance
11B-604.4 Seats
11B-604.5 Grab Bars
11B-604.6 Flush Controls
11B-604.7 Dispensers

11B-604.8	Toilet Compartments
11B-604.9	Water Closets and Toilet Compartments for Children's Use
11B-605	**Urinals**
11B-605.1	General
11B-605.2	Height and Depth
11B-605.3	Clear Floor Space
11B-605.4	Flush Controls
11B-606	**Lavatories and Sinks**
11B-606.1	General
11B-606.2	Clear Floor Space
11B-606.3	Height
11B-606.4	Faucets
11B-606.5	Exposed Pipes and Surfaces
11B-606.6	Adjacent Side Wall or Partition
11B-606.7	Sink Depth
11B-607	**Bathtubs**
11B-607.1	General
11B-607.2	Clearance
11B-607.3	Seat
11B-607.4	Grab Bars
11B-607.5	Controls
11B-607.6	Shower Spray Unit and Water
11B-607.7	Bathtub Enclosures
11B-608	**Shower Compartments**
11B-608.1	General
11B-608.2	Size and Clearances for Shower Compartments
11B-608.3	Grab Bars
11B-608.4	Seats
11B-608.5	Controls
11B-608.6	Shower Spray Unit and Water
11B-608.7	Thresholds
11B-608.8	Shower Enclosures
11B-608.9	Shower Floor or Ground Surface
11B-608.10	Soap Dish
11B-609	**Grab Bars**
11B-609.1	General
11B-609.2	Cross Section
11B-609.3	Spacing
11B-609.4	Position of Grab Bars
11B-609.5	Surface Hazards
11B-609.6	Fittings
11B-609.7	Installation
11B-609.8	Structural Strength
11B-609.9	Alternate Configuration
11B-610	**Seats**
11B-610.1	General
11B-610.2	Bathtub Seats
11B-610.3	Shower Compartment Seats
11B-610.4	Structural Strength
11B-611	**Washing Machines and Clothes Dryers**
11B-611.1	General

11B-611.2 Clear Floor Space
11B-611.3 Operable Parts
11B-611.4 Height
11B-612 Saunas and Steam Rooms
11B-612.1 General
11B-612.2 Bench
11B-612.3 Turning Space

Division 7: Communication Elements and Features

11B-701 General
11B-701.1 Scope
11B-702 Fire Alarm Systems
11B-702.1 General
11B-703 Signs
11B-703.1 General
11B-703.2 Raised Characters
11B-703.3 Braille
11B-703.4 Installation Height and Location
11B-703.5 Visual Characters
11B-703.6 Pictograms
11B-703.7 Symbols of Accessibility
11B-703.8 Variable Message Signs
11B-704 Telephones
11B-704.1 General
11B-704.2 Wheelchair Accessible Telephones
11B-704.3 Volume Control Telephones
11B-704.4 TTYs
11B-704.5 TTY Shelf
11B-705 Detectable Warnings and Directional Warning Texture
11B-705.1 Detectable Warnings
11B-705.2 Detectable Directional Texture
11B-705.3 Product Approval
11B-706 Assistive Listening System
11B-706.1 General
11B-706.2 Receiver Jacks
11B-706.3 Receiver Hearing-Aid Compatibility
11B-706.4 Sound Pressure Level
11B-706.5 Signal-to-Noise Ratio
11B-706.6 Peak Clipping Level
11B-707 Automatic Teller Machine, Fare Machines and Point-of-Sale Devices
11B-707.1 General
11B-707.2 Clear Floor or Ground Space
11B-707.3 Operable Parts
11B-707.4 Privacy
11B-707.5 Speech Output
11B-707.6 Input
11B-707.7 Display Screen
11B-707.8 Braille Instructions
11B-707.9 Point-of-Sale Devices

11B-708 **Two-Way Communication Systems**
11B-708.1 General
11B-708.2 Audible and Visual Indicators
11B-708.3 Handsets
11B-708.4 Residential Dwelling Unit Communication Systems

Division 8: Special Rooms, Spaces and Elements
11B-801 **General**
11B-801.1 Scope
11B-802 **Wheelchair Spaces, Companion Seats, Designated Aisle Seats and Semi-Ambulant Seats**
11B-802.1 Wheelchair Spaces
11B-802.2 Lines of Sight
11B-802.3 Companion Seats
11B-802.4 Designated Aisle Seats
11B-802.5 Semi-Ambulant Seats
11B-803 **Dressing, Fitting and Locker Rooms**
11B-803.1 General
11B-803.2 Turning Space
11B-803.3 Door Swing
11B-803.4 Benches
11B-803.5 Coat Hooks and Shelves
11B-803.6 Mirrors
11B-804 **Kitchens, Kitchenettes and Wet Bars**
11B-804.1 General
11B-804.2 Clearance
11B-804.3 Kitchen Work Surface
11B-804.4 Sinks
11B-804.5 Storage
11B-804.6 Appliances
11B-805 **Medical Care and Long-Term Care Facilities**
11B-805.1 General
11B-805.2 Patient Bedrooms and Resident Sleeping Rooms
11B-805.3 Waiting Rooms
11B-805.4 Examination, Diagnostic and Treatment Rooms
11B-805.5 Patient Change Areas
11B-805.6 Hand Washing Fixtures, Lavatories and Sinks
11B-805.7 Built-in Cabinets and Work Surfaces
11B-806 **Transient Lodging and Guest Rooms**
11B-806.1 General
11B-806.2 Guest Rooms with Mobility Features
11B-806.3 Guest Rooms with Communication Features
11B-807 **Holding Cells and Housing Cells**
11B-807.1 General
11B-807.2 Cells with Mobility Features
11B-807.3 Cells with Communication Features
11B-808 **Courtrooms**
11B-808.1 General
11B-808.2 Turning Space
11B-808.3 Clear Floor Space
11B-808.4 Judges' Benches and Courtroom Stations

11B-809 **Residential Dwelling Units**
11B-809.1 General
11B-809.2 Accessible Routes
11B-809.3 Kitchen
11B-809.4 Toilet Facilities and Bathing Facilities
11B-809.5 Residential Dwelling Units with Communication Features
11B-810 **Transportation Facilities**
11B-810.1 General
11B-810.2 Bus Boarding and Alighting Areas
11B-810.3 Bus Shelters
11B-810.4 Bus Signs
11B-810.5 Rail Platforms
11B-810.6 Rail Station Signs
11B-810.7 Public Address Systems
11B-810.8 Clocks
11B-810.9 Escalators
11B-810.10 Track Crossings
11B-811 **Storage**
11B-811.1 General
11B-811.2 Clear Floor or Ground Space
11B-811.3 Height
11B-811.4 Operable Parts

Division 9: Built-In Elements
11B-901 **General**
11B-901.1 Scope
11B-902 **Dining Surfaces and Work Surfaces**
11B-902.1 General
11B-902.2 Clear Floor or Ground Space
11B-902.3 Height
11B-902.4 Dining Surfaces and Work Surfaces for Children's Use
11B-903 **Benches**
11B-903.1 General
11B-903.2 Clear Floor or Ground Space
11B-903.3 Size
11B-903.4 Back Support
11B-903.5 Height
11B-903.6 Structural Strength
11B-903.7 Wet Locations
11B-904 **Check-Out Aisles and Sales and Service Counters**
11B-904.1 General
11B-904.2 Approach
11B-904.3 Check-Out Aisles
11B-904.4 Sales and Service Counters
11B-904.5 Food Service Lines
11B-904.6 Security Glazing

Division 10: Recreation Facilities
11B-1001 **General**
11B-1001.1 Scope

11B-1002 Amusement Rides
11B-1002.1 General
11B-1002.2 Accessible Routes
11B-1002.3 Load and Unload Areas
11B-1002.4 Wheelchair Spaces in Amusement Rides
11B-1002.5 Amusement Ride Seats Designed for Transfer
11B-1002.6 Transfer Devices for Use with Amusement Rides
11B-1003 Recreational Boating Facilities
11B-1003.1 General
11B-1003.2 Accessible Routes
11B-1003.3 Clearances
11B-1004 Exercise Machines and Equipment
11B-1004.1 Clear Floor Space
11B-1005 Fishing Piers and Platforms
11B-1005.1 Accessible Routes
11B-1005.2 Railings
11B-1005.3 Edge Protection
11B-1005.4 Clear Floor or Ground Space
11B-1005.5 Turning Space
11B-1006 Golf Facilities
11B-1006.1 General
11B-1006.2 Accessible Routes
11B-1006.3 Golf Car Passages
11B-1006.4 Weather Shelters
11B-1007 Miniature Golf Facilities
11B-1007.1 General
11B-1007.2 Accessible Routes
11B-1007.3 Miniature Golf Holes
11B-1008 Play Areas
11B-1008.1 General
11B-1008.2 Accessible Routes
11B-1008.3 Transfer Systems
11B-1008.4 Play Components
11B-1009 Swimming Pools, Wading Pools, and Spas
11B-1009.1 General
11B-1009.2 Pool Lifts
11B-1009.3 Sloped Entries
11B-1009.4 Transfer Walls
11B-1009.5 Transfer Systems
11B-1009.6 Pool Stairs
11B-1010 Shooting Facilities with Firing Positions
11B-1010.1 Turning Space

DIVISION 1: APPLICATION AND ADMINISTRATION

11B-101 Purpose

***11B*-101.1 General.** This *chapter* contains scoping and technical requirements for accessibility to sites, facilities, buildings, and elements by individuals with disabilities. The requirements are to be applied during the design, construction, additions to, and alteration of sites, facilities, buildings, and elements to the extent required by *Chapter 1, Section 1.9.*

USDOJ

Advisory 11B-101.1 General. In addition to these requirements, covered entities must comply with the regulations issued by the U.S. Department of Justice and the U.S. Department of Transportation under the Americans with Disabilities Act. There are issues affecting individuals with disabilities which are not addressed by these requirements, but which are covered by the U.S. Department of Justice and the U.S. Department of Transportation regulations. ■

DSA

Advisory 11B-101.1 General (1). Chapter 11B accessibility regulations are applicable to: 1) publicly funded buildings, structures, sidewalks, curbs and related facilities; 2) privately funded public accommodations and commercial facilities; and 3) public housing and private housing available for public use. Refer to Chapter 1, Section 1.9 for additional information.■

DSA

Advisory 11B-101.1 General (2). Accessible features, accommodations and elements must comply with the requirements of Chapter 11B. In some cases Chapter 11B requires compliance with requirements in other parts of the building code. When additional scoping or technical requirements are located in other parts of the building code, the features, accommodations and elements must comply with those regulations **and** Chapter 11B. ■

11B*-101.2 *Reserved.

***11B*-102 Dimensions for adults and children.** The technical requirements are based on adult dimensions and anthropometrics. In addition, this *chapter* includes technical requirements based on children's dimensions and anthropometrics for drinking fountains, water closets, toilet compartments, lavatories and sinks, dining surfaces, and work surfaces.

***11B*-103 Equivalent facilitation.** Nothing in these requirements prevents the use of designs, products, or technologies as alternatives to those prescribed, provided they result in substantially equivalent or greater accessibility and usability.

USDOJ

Advisory 11B-103 Equivalent facilitation. The responsibility for demonstrating equivalent facilitation in the event of a challenge rests with the covered entity. With the exception of transit facilities, which are covered by regulations issued by the Department of Transportation, there is no process for certifying that an alternative design provides equivalent facilitation. ■

***11B*-104 Conventions**

***11B*-104.1 Dimensions.** Dimensions that are not stated as “maximum” or “minimum” are absolute.

DSA

Advisory 11B-104.1 Dimensions. This section clarifies the dimensioning conventions used in this chapter. Dimensions stated as a "maximum" or "minimum" provide a dimensional range for design purposes. Dimensions not stated as ‘maximum’ or ‘minimum’ are absolute values for design purposes. ■

***11B*-104.1.1 Construction and manufacturing tolerances.** All dimensions are subject to conventional industry tolerances except where the requirement is stated as a range with specific minimum and maximum end points.

USDOJ

Advisory 11B-104.1.1 Construction and manufacturing tolerances. Conventional industry tolerances recognized by this provision include those for field conditions and those that may be a necessary consequence of a particular manufacturing process. Recognized tolerances are not intended to apply to design work.

It is good practice when specifying dimensions to avoid specifying a tolerance where dimensions are absolute. For example, if this document requires "1½ inches," avoid specifying "1½ inches plus or minus X inches."

Where the requirement states a specified range, such as in Section 11B-609.4 where grab bars must be installed between 33 inches and 36 inches above the floor, the range provides an adequate tolerance and therefore no tolerance outside of the range at either end point is permitted.

Where a requirement is a minimum or a maximum dimension that does not have two specific minimum and maximum end points, tolerances may apply. Where an element is to be installed at the minimum or maximum permitted dimension, such as "15 inches minimum" or "5 pounds maximum", it would not be good practice to specify "5 pounds (plus X pounds) or 15 inches (minus X inches)." Rather, it would be good practice to specify a dimension less than the required maximum (or more than the required minimum) by the amount of the expected field or manufacturing tolerance and not to state any tolerance in conjunction with the specified dimension.

Specifying dimensions in design in the manner described above will better ensure that facilities and elements accomplish the level of accessibility intended by these requirements. It will also more often produce an end result of strict and literal compliance with the stated requirements and eliminate enforcement difficulties and issues that might otherwise arise. Information on specific tolerances may be available from industry or trade organizations, code groups and building officials, and published references. ■

DSA

Advisory 11B-104.1.1 Construction and manufacturing tolerances. Application of conventional industry tolerances must be on a case-by-case, project-by-project basis. Predetermined guidelines for construction tolerances could unnecessarily encourage contractors and others to deviate from the access regulations found in the CBC and may wrongfully be viewed by some to have the effect of law.

Conventional building industry tolerances include those for field conditions and those that may be a necessary consequence of a particular manufacturing process. Recognized tolerances are not intended to apply to design work.

Where accessibility provisions state a dimensional range, such as Section 11B-505.4 which requires the top of stair handrails to be installed between 34 inches and 38 inches above the nosing, the range already provides an adequate tolerance, therefore, no tolerance outside the range at either end point is permitted.

An element designed to be constructed at either the maximum or minimum permitted dimensions puts the construction at risk if construction errors result in a violation of the standards. It is good practice to specify a dimension less than the required maximum (or more than the required minimum) by the amount of the expected field or manufacturing tolerance and not to state any tolerance in conjunction with the specified dimension.

In other words, dimensions noted in accessibility provisions as “maximum” or “minimum” should not be considered dimensions for design, as they represent the limits of a requirement. To be sure that field tolerances result in usable construction, notes and dimensions in construction documents should anticipate expected tolerances so that a required dimensional range is not exceeded by the addition of a finish or a variation in construction practice.

Specifying dimensions in design in the manner described above will better ensure that facilities and elements accomplish the level of accessibility intended by the provision. It will also more often produce an end result of strict and literal compliance with the stated requirements and eliminate enforcement difficulties and issues that might otherwise arise.■

***11B*-104.2 Calculation of percentages.** Where the required number of elements or facilities to be provided is determined by calculations of ratios or percentages and remainders or fractions result, the next greater whole number of such elements or facilities shall be provided. Where the determination of the required size or dimension of an element or facility involves ratios or percentages, rounding down for values less than one half shall be permitted.

***11B*-104.3 Figures.** Unless specifically stated otherwise, figures are provided for informational purposes only.

Convention	Description
36 914	dimension showing English units (in inches unless otherwise specified) above the line and SI units (in millimeters unless otherwise specified) below the line
6 152	dimension for small measurements
33-36 838-914	dimension showing a range with minimum - maximum
min	minimum
max	maximum
>	greater than
≥	greater than or equal to
<	less than
≤	less than or equal to
	boundary of clear floor space or maneuvering clearance
℄	centerline
	a permitted element or its extension
	direction of travel or approach
	a wall, floor, ceiling or other element cut in section or plan
	a highlighted element in elevation or plan
	location zone of element, control or feature

Figure *11B*-104
Graphic Convention for Figures

***11B*-105 Referenced standards**

***11B*-105.1 General.** *See Chapter 35.*

***11B*-106 Definitions**

***11B*-106.1 General.** For the purpose of this *chapter*, the terms *listed* in *Section 11B*-106.5 *and defined in Chapter 2* have the indicated meaning.

***11B*-106.2 Terms defined in referenced standards.** Terms not *listed* in *Section 11B*-106.5 *and not defined in Chapter 2, Section 202,* but specifically defined in a referenced standard, shall have the specified meaning from the referenced standard unless otherwise stated.

***11B*-106.3 Undefined terms.** The meaning of terms not specifically *listed* in *11B*-106.5, *and not defined in Chapter 2, Section 202,* or in referenced standards shall be as defined by collegiate dictionaries in the sense that the context implies.

***11B*-106.4 Interchangeability.** *See Chapter 2, Section 201.2.*

***11B*-106.5 Defined terms.** *The following terms are defined in Chapter 2, Section 202.*

DSA

Advisory 11B-106.5 Defined terms. Terms defined in Chapter 2, Section 202 and adopted by DSA-AC for access are listed below. Non-italicized terms indicate 2010 Americans with Disabilities Act Standards model code definitions. Italicized terms indicate definitions carried forward from the 2010 California Building Code. ■

Access Aisle.

Accessibility.

Accessible.

Accessible Element.

Accessible Means of Egress.

Accessible Route.

Accessible Space.

Adaptable.

Addition.

Administrative Authority.

Aisle.

Alteration.

Amusement Attraction.

Amusement Ride.

Amusement Ride Seat.

ANSI.

Approved.

***Approved Testing Agency*.**

Area of Refuge.

Area of Sport Activity.

Assembly Area.

Assistive Listening System (ALS).

Automatic Door.

Automatic Teller Machine (ATM).

Bathroom.

Blended Transition.

Boarding Pier.

Boat Launch Ramp.

Boat Slip.

Building.

Building Official.

Catch Pool.

CCR.

Characters.

Children's Use.

Circulation Path.

Clear.

Clear Floor Space.

Closed-Circuit Telephone.

Commercial Facilities.

Common Use.

Comply With.

Cross Slope.

Curb Cut.

Curb Ramp.

Detectable Warning.

Directional Sign.

Disability.

Dormitory.

Element.

Elevated Play Component.

Elevator, Passenger.

Employee Work Area.

Enforcing Agency.

Entrance.

Equivalent Facilitation.

Existing Building or Facility.

Exit.

Facility.

Functional Area.

Gangway.

Golf Car Passage.

Grab Bar.

Grade (Adjacent Ground Elevation).

Grade Break.

Ground Floor.

Ground Level Play Component.

Guard.

Handrail.

Health Care Provider.

Historical Buildings.

Housing at a Place of Education.

If, If . . . Then.

International Symbol of Accessibility.

Key Station.

Kick Plate.

Kitchen or Kitchenette.

Lavatory.

Mail Boxes.

Marked Crossing.

May.

Mezzanine.

NFPA.

Nosing.

Occupant Load.

Occupiable Space.

Open Riser.

Operable Part.

Passenger Elevator.

Path of Travel.

Pedestrian.

Pedestrian Way.

Permanent.

Permit.

Pictogram.

Place of Public Accommodation.

Platform.

Platform (Wheelchair) Lift.

Play Area.

Play Component.

Point-of-Sale Device.

Powder Room.

Power-Assisted Door.

Private Building or Facility.

Professional Office of a Health Care Provider.

Public Building or Facility.

Public Entity.

Public Entrance.

Public Housing.

Public Use.

Public-Use Areas.

Public Way.

Qualified Historic Building or Facility.

Ramp.

Reasonable Portion.

Recommend.

Remodeling.

Repair.

Residential Dwelling Unit.

Restricted Entrance.

Riser.

Running Slope.

Self-Service Storage.

Service Entrance.

Shall.

Shopping Center (or Shopping Mall).

Should.

Sidewalk.

Signage.

Sink.

Site.

Sleeping Accommodations.

Soft Contained Play Structure.

Space.

Specified Public Transportation.

Stage.

Stair.

Stairway.

Story.

Structural Frame.

Structure.

Tactile.

Tactile Sign.

Technically Infeasible.

Teeing Ground.

Temporary.

Text Telephone.

Transfer Device.

Transient Lodging.

Transit Boarding Platform.

Transition Plate.

Tread.

TTY.

Unreasonable Hardship.

Use Zone.

Valuation Threshold.

Vehicular Way.

Walk.

Wet Bar.

Wheelchair.

Wheelchair Space.

Workstation.

Work Area Equipment.

11B-107 Special conditions appeals action

See Chapter 1, Section 1.9.1.5.

11B-108 Maintenance of accessible features

A public accommodation shall maintain in operable working condition those features of facilities and equipment that are required to be accessible to and useable by persons with disabilities. Isolated or

temporary interruptions in service or accessibility due to maintenance or repairs shall be permitted.

DSA

11B-108 Maintenance of accessible features. Features for accessibility must be permanently functional, unobstructed and may not be removed. It is not sufficient to provide features such as accessible routes, parking, elevators, ramps or signage if those features are not maintained in a manner that enables individuals with disabilities to use them. Inoperable elevators, locked accessible doors, or "accessible" routes that are obstructed by furniture, filing cabinets or potted plants are not accessible to nor usable by persons with disabilities. ■

11B-201 Application

***11B*-201.1 Scope.** All areas of newly designed and newly constructed buildings and facilities and altered portions of existing buildings and facilities shall comply with these requirements.

> USDOJ
>
> **Advisory 11B-201.1 Scope**. These requirements are to be applied to all areas of a facility unless exempted, or where scoping limits the number of multiple elements required to be accessible. For example, not all medical care patient rooms are required to be accessible; those that are not required to be accessible are not required to comply with these requirements. However, common use and public use spaces such as recovery rooms, examination rooms, and cafeterias are not exempt from these requirements and must be accessible. ■

***11B*-201.2 Application based on building or facility use.** Where a site, building, facility, room, or space contains more than one use, each portion shall comply with the applicable requirements for that use.

***11B*-201.3 Temporary and permanent structures.** These requirements shall apply to temporary and permanent buildings and facilities.

> USDOJ
>
> **Advisory 11B-201.3 Temporary and permanent structures.** Temporary buildings or facilities covered by these requirements include, but are not limited to, reviewing stands, temporary classrooms, bleacher areas, stages, platforms and daises, fixed furniture systems, wall systems, and exhibit areas, temporary banking facilities, and temporary health screening facilities. Structures and equipment directly associated with the actual processes of construction are not required to be accessible as permitted in Section 11B-203.2. ■

11B-201.4 Construction support facilities. *These requirements shall apply to temporary or permanent construction support facilities for uses and activities not directly associated with the actual processes of construction, including but not limited to offices, meeting rooms, plan rooms, other administrative or support functions. When provided, toilet and bathing facilities serving construction support facilities shall comply with Section 11B-213. When toilet and bathing facilities serving construction support facilities are provided by portable units, at least one of each type shall be accessible and connected to the construction support facilities it serves by an accessible route.*

> ***Exception:*** *During construction an accessible route shall not be required between site arrival points or the boundary of the area of construction and the entrance to the construction support facilities if the only means of access between them is a vehicular way not providing pedestrian access.*

DSA

Advisory 11B-201.4 Construction support facilities. This section clarifies that construction support facilities located on or adjacent to a construction site, but **not** directly associated with the actual processes of construction must comply with the accessibility provisions of Chapter 11B. Construction support facilities may include but are not limited to, offices, meeting rooms, plan rooms and other administrative and support spaces. Toilet facilities serving these construction support facilities, including portable units, must also comply with the accessibility provisions of this chapter. While an accessible route is required between construction support facilities and the toilet and parking facilities serving them, an accessible route is not required between site arrival points and construction support facilities when the only means of reaching the construction support facilities is a vehicular way. ■

***11B*-202 Existing buildings and facilities**

***11B*-202.1 General.** Additions and alterations to existing buildings or facilities shall comply with *Section 11B*-202.

***11B*-202.2 Additions.** Each addition to an existing building or facility shall comply with the requirements for new construction *and* shall comply with *Section 11B*-202.4.

DSA

Advisory 11B-202.2 Additions. An addition to site improvements, such as a new patio or playground, may require an accessible path of travel from the site arrival point to restrooms, drinking fountains, signs, public telephones (if available) serving the addition. ■

***11B*-202.3 Alterations.** Where existing elements or spaces are altered, each altered element or space shall comply with the applicable requirements of *Division 2, including Section 11B-202.4.*

Exceptions:

1. ***Reserved.***

2. ***Technically infeasible.*** In alterations, where *the enforcing authority determines* compliance with applicable requirements is technically infeasible, the alteration shall *provide equivalent facilitation or* comply with the requirements to the maximum extent feasible. *The details of the finding that full compliance with the requirements is technically infeasible shall be recorded and entered into the files of the enforcing agency.*

3. Residential dwelling units not required to be accessible in compliance with *this code* shall not be required to comply with *Section 11B*-202.3.

USDOJ

Advisory 11B-202.3 Alterations. Although covered entities are permitted to limit the scope of an alteration to individual elements, the alteration of multiple elements within a room or space may provide a cost-effective opportunity to make the entire room or space accessible. Any elements or spaces of the building or facility that are required to comply with these requirements must be made accessible within the scope of the alteration, to the maximum extent feasible. If providing accessibility in compliance with these requirements for people with one type of disability (e.g., people who use wheelchairs) is not feasible, accessibility must still be provided in compliance with the requirements for people with other types of disabilities (e.g., people who have hearing impairments or who have vision impairments) to the extent that such accessibility is feasible. ■

DSA

Advisory 11B-202.3 Alterations (seismic strengthening). In Legal Opinion No. 94-1109, dated May 10, 1995, the Attorney General for the State of California concluded that seismic strengthening work in an existing building constitutes a "building alteration, structural repair or addition" for purposes of providing access to the building for persons with disabilities.

In existing buildings or facilities, if seismic strengthening or upgrade work does not alter the primary use or function of the building or facility and/or does not alter the design of specific rooms or spaces, then the requirement for an accessible path of travel to the area of specific alteration does not apply. However, an accessible primary entrance, toilet and bathing facilities, drinking fountains, signs and public telephones, as well as an accessible route connecting these elements must be provided.

In existing buildings or facilities, when the primary use or function of the building or facility and/or design of specific rooms or spaces are altered, the seismic strengthening or upgrade work must comply with all applicable accessibility regulations for new construction. In addition, an accessible primary entrance to the building or facility and path of travel to the specific area of alteration, including toilet and bathing facilities, drinking fountains, signs, and public telephones serving the area must be provided. ■

DSA

Advisory 11B-202.3 Alterations (fire damage repair). US Department of Justice technical assistance letter #772, dated August 26, 1998, indicates reconstruction after a fire is considered an alteration. Chapter 2, Section 202 defines *alteration* as "…a change, addition or modification in construction, change in occupancy or use, or structural repair to an existing building or facility. …" Reroofing, painting or wallpapering, or changes to mechanical and electrical systems are generally not considered to be alterations.

When the damage caused by a fire is minor and can be corrected by cleaning, re-painting or re-wallpapering, accessibility provisions based on alterations are not triggered. The accessibility requirements of Section 11B-202.3 would apply where alterations are made in the fire damaged area, for example, if wall or roof structures are being reconstructed or repaired. These requirements include: (1) reconstruction work in the specific area of fire damage that complies with all applicable accessibility provisions for new construction and (2) the obligation to provide an accessible primary entrance to the building or facility and primary path of travel to the specific area of alteration, including toilet and bathing facilities, drinking fountains, signs, and public telephones that serve the area. ■

DSA

Advisory 11B-202.3 Alterations (change in occupancy). When a building or facility undergoes a change of occupancy, the entire building or facility (or portion thereof) is considered the area of alteration. The entire building or facility (or portion thereof) must be upgraded to comply with current accessibility requirements for new construction. ■

DSA

Advisory 11B-202.3 Alterations (pre-existing conditions). Code changes to the California Building Code do not generally "trigger" the requirement to comply with the current code in existing buildings unless the building or facility is undergoing alteration. ■

***11B*-202.3.1 Prohibited reduction in access.** An alteration that decreases or has the effect of decreasing the accessibility of a building or facility below the requirements for new construction at the time of the alteration is prohibited.

***11B*-202.3.2 Extent of application.** An alteration of an existing element, space, or area of a building or facility shall not impose a requirement for accessibility greater than required for new construction.

11B-202.3.3 Alteration of single elements. *If alterations of single elements, when considered together, amount to an alteration of a room or space in a building or facility, the entire room or space shall be made accessible.*

11B*-202.4 *Path of travel requirements in* alterations*, additions and structural repairs. *When alterations or additions are made to existing buildings or facilities, an accessible path of travel to the specific area of alteration or addition shall be provided. The primary accessible path of travel shall include:*

1. *A primary entrance to the building or facility,*
2. *Toilet and bathing facilities serving the area,*
3. *Drinking fountains serving the area,*
4. *Public telephones serving the area, and*
5. *Signs.*

Exceptions:

1. Residential dwelling units shall comply with *Section 11B-233.3.4.2*.
2. *If the following elements of a path of travel have been constructed or altered in compliance with the accessibility requirements of the immediately preceding edition of the California Building Code, it shall not be required to retrofit such elements to reflect the incremental changes in this code solely because of an alteration to an area served by those elements of the path of travel:*
    1. *A primary entrance to the building or facility,*
    2. *Toilet and bathing facilities serving the area,*
    3. *Drinking fountains serving the area,*
    4. *Public telephones serving the area, and*
    5. *Signs.*
3. *Additions or alterations to meet accessibility requirements consisting of one or more of the following items shall be limited to the actual scope of work of the project and shall not be required to comply with Section 11B-202.4:*
    1. *Altering one building entrance.*

2. *Altering one existing toilet facility.*

3. *Altering existing elevators.*

4. *Altering existing steps.*

5. *Altering existing handrails.*

4. *Alterations solely for the purpose of barrier removal undertaken pursuant to the requirements of the Americans with Disabilities Act (Public Law 101-336, 28 C.F.R., Section 36.304) or the accessibility requirements of this code as those requirements or regulations now exist or are hereafter amended consisting of one or more of the following items shall be limited to the actual scope of work of the project and shall not be required to comply with Section 11B-202.4:*

    1. *Installing ramps.*

    2. *Making curb cuts in sidewalks and entrance.*

    3. *Repositioning shelves.*

    4. *Rearranging tables, chairs, vending machines, display racks, and other furniture.*

    5. *Repositioning telephones.*

    6. *Adding raised markings on elevator control buttons.*

    7. *Installing flashing alarm lights.*

    8. *Widening doors.*

    9. *Installing offset hinges to widen doorways.*

    10. *Eliminating a turnstile or providing an alternative accessible route.*

    11. *Installing accessible door hardware.*

    12. *Installing grab bars in toilet stalls.*

    13. *Rearranging toilet partitions to increase maneuvering space.*

    14. *Insulating lavatory pipes under sinks to prevent burns.*

    15. *Installing a raised toilet seat.*

    16. *Installing a full-length bathroom mirror.*

    17. *Repositioning the paper towel dispenser in a bathroom.*

    18. *Creating designated accessible parking spaces.*

    19. *Removing high-pile, low-density carpeting.*

5. *Alterations of existing parking lots by resurfacing and/or restriping shall be limited to the actual scope of work of the project and shall not be required to comply with Section 11B-202.4.*

6. *The addition or replacement of signs and/or identification devices shall be limited to the actual scope of work of the project and shall not be required to comply with Section 11B-202.4.*

7. *Projects consisting only of heating, ventilation, air conditioning, reroofing, electrical work not involving placement of switches and receptacles, cosmetic work that does not affect items regulated by this code, such as painting, equipment not considered to be a part of the architecture of the building or area, such as computer terminals and office equipment shall not be required to comply with Section 11B-202.4. unless they affect the usability of the building or facility.*

8. *When the adjusted construction cost is less than or equal to the current valuation threshold, as defined in Chapter 2, Section 202, the cost of compliance with Section 11B-202.4 shall be limited to 20 percent of the adjusted construction cost of alterations, structural repairs or additions. When the cost of full compliance with Section 11B-202.4 would exceed 20 percent, compliance shall be provided to the greatest extent possible without exceeding 20 percent.*

   When the adjusted construction cost exceeds the current valuation threshold, as defined in Chapter 2, Section 202, and the enforcing agency determines the cost of compliance with Section 11B-202.4 is an unreasonable hardship, as defined in Chapter 2, Section 202, full compliance with Section 11B-202.4 shall not be required. Compliance shall be provided by equivalent facilitation or to the greatest extent possible without creating an unreasonable hardship; but in no case shall the cost of compliance be less than 20 percent of the adjusted construction cost of alterations, structural repairs or additions. The details of the finding of unreasonable hardship shall be recorded and entered into the files of the enforcing agency and shall be subject to Chapter 1, Section 1.9.1.5, Special Conditions for Persons with Disabilities Requiring Appeals Action Ratification.

   For the purposes of this exception, the adjusted construction cost of alterations, structural repairs or additions shall not include the cost of alterations to path of travel elements required to comply with Section 11B-202.4.

   In choosing which accessible elements to provide, priority should be given to those elements that will provide the greatest access in the following order:

   1. *An accessible entrance;*
   2. *An accessible route to the altered area;*
   3. *At least one accessible restroom for each sex or a single accessible unisex restroom;*
   4. *Accessible telephones;*
   5. *Accessible drinking fountains; and*
   6. *When possible, additional accessible elements such as parking, signs, storage and alarms.*

   If an area has been altered without providing an accessible path of travel to that area, and subsequent alterations of that area or a different area on the same path of travel are undertaken within three years of the original alteration, the total cost of alterations to the areas on that path of travel during the preceding three-year period shall be considered in determining whether the cost of making that path of travel accessible is disproportionate.

9. *Certain types of privately funded, multistory buildings and facilities were formerly exempt from accessibility requirements above and below the first floor under this code, but as of, April 1, 1994, are no longer exempt due to more restrictive provisions in the federal Americans with Disabilities Act. In alteration projects involving buildings and facilities previously approved and built without elevators, areas above and below the ground floor are subject to the 20-percent*

disproportionality provisions described in Exception 8, above, even if the value of the project exceeds the valuation threshold in Exception 8. The types of buildings and facilities are:

1. *Office buildings and passenger vehicle service stations of three stories or more and 3,000 or more square feet (279 m^2) per floor.*

2. *Offices of physicians and surgeons.*

3. *Shopping centers.*

4. *Other buildings and facilities three stories or more and 3,000 or more square feet (279 m^2) per floor if a reasonable portion of services sought and used by the public is available on the accessible level.*

For the general privately funded multistory building exception applicable to new construction and alterations, see Section 11B-206.2.3, Exception 1.

The elevator exception set forth in this section does not obviate or limit in any way the obligation to comply with the other accessibility requirements in this code. For example, floors above or below the accessible ground floor must meet the requirements of this section except for elevator service. If toilet or bathing facilities are provided on a level not served by an elevator, then toilet or bathing facilities must be provided on the accessible ground floor.

DSA

Advisory 11B-202.4 Path of travel requirements in alterations, additions and structural repairs. New access regulations made effective after the date of last construction may require owners to upgrade their facility to comply with the current regulations during alterations, additions or structural repair. ■

***11B*-202.5 Alterations to qualified historic buildings and facilities.** Alterations to a qualified historic building or facility shall comply with *the State Historical Building Code, Part 8, Title 24, of the California Code of Regulations.*

Exception: ***Reserved.***

DSA

Advisory 11B-202.5 Alterations to qualified historic buildings and facilities. The basic criteria for designating a building or property as a qualified historic building or facility are administered by the National Register program of the National Park Service. In California, those responsibilities are delegated to the Office of Historic Preservation. The Office of Historic Preservation administers the National Register and has created and administers the California Register, a similar listing. The Office of Historic Preservation delegates authority to cities and counties as "certified local governments" to apply National Register criteria for creating local lists of historic buildings and properties. There are also local governments and agencies that designate buildings and properties as historic outside of the Office of Historic Preservation program.

The State Historical Building Code provides a definition of qualified historic building or property, and can be used to determine if a building or facility is qualified. The State Historical Building Code is used in conjunction with the accessibility requirements of Chapter 11B. In general, alteration projects in qualified historic buildings and facilities must comply with the new construction requirements of Chapter 11B, however, the State Historical Building Code provides alternative accessibility provisions when an entity believes that compliance with the Chapter 11B requirements for specific elements would threaten or destroy the historical

significance of the building or facility. Alternative provisions are provided for entrances, doors, power-assisted doors, toilet rooms, and exterior and interior ramps and lifts. Equivalent facilitation is permitted in specific cases when the alternative provisions themselves would threaten or destroy the historical significance or character defining features of the historic building or facility. Alternative provisions and equivalent facilitation are applied on a case-by-case basis only. ■

***11B*-203 General exceptions**

***11B*-203.1 General.** Sites, buildings, facilities, and elements are exempt from these requirements to the extent specified by *Section 11B*-203.

***11B*-203.2 Construction sites.** Structures and sites directly associated with the actual processes of construction, including but not limited to, scaffolding, bridging, materials hoists, materials storage and construction trailers shall not be required to comply with these requirements or to be on an accessible route. Portable toilet units provided for use exclusively by construction personnel on a construction site shall not be required to comply with *Section 11B*-213 or to be on an accessible route.

DSA

Advisory 11B-203.2 Construction sites. This section provides a general exception for structures and sites directly associated with the actual processes of construction from the accessibility provisions of Chapter 11B. Construction associated structures and sites may include, but are not limited to, scaffolding, bridging, materials hoists, materials storage and construction trailers. Portable toilet units provided exclusively for use by construction personnel on a construction site are also exempted from the accessibility provisions of this chapter. ■

***11B*-203.3 Raised areas.** Areas raised primarily for purposes of security, life safety, or fire safety, including but not limited to, observation or lookout galleries, prison guard towers, fire towers or life guard stands shall not be required to comply with these requirements or to be on an accessible route.

***11B*-203.4 Limited access spaces.** Spaces *not customarily occupied and* accessed only by ladders, catwalks, crawl spaces, or very narrow passageways shall not be required to comply with these requirements or to be on an accessible route.

***11B*-203.5 Machinery spaces.** Spaces frequented only by service personnel for maintenance, repair or occasional monitoring of equipment shall not be required to comply with these requirements or to be on an accessible route. Machinery spaces include, but are not limited to, elevator pits or elevator penthouses; mechanical, electrical or communications equipment rooms; piping or equipment catwalks; water or sewage treatment pump rooms and stations; electric substations and transformer vaults; and highway and tunnel utility facilities.

***11B*-203.6 Single occupant structures.** Single occupant structures accessed only by passageways below grade or elevated above standard curb height, including but not limited to, toll booths that are accessed only by underground tunnels, shall not be required to comply with these requirements or to be on an accessible route.

***11B*-203.7 Detention and correctional facilities.** In detention and correctional facilities, common use areas that are used only by inmates or detainees and security personnel and that do not serve holding cells or housing cells required to comply with *Section 11B*-232, shall not be required to comply with these requirements or to be on an accessible route.

***11B*-203.8 Residential facilities.** In *public housing* residential facilities, common use areas that do not serve residential dwelling units required to provide mobility features complying with *Sections 11B*-809.2 through *11B*-809.4 *and adaptable features complying with Chapter 11A, Division IV* shall not be required to comply with these requirements or to be on an accessible route.

***11B*-203.9 Employee *workstations*.** *Employee workstations shall be on an accessible route complying with Division 4.* Spaces and elements within employee *workstations* shall only be required to comply with *Sections 11B*-207.1, *11B*-215.3*, 11B-302, 11B-303, and 11B-404.2.3. Common use circulation paths within employee workstations shall comply with Section 11B-206.2.8.*

USDOJ

Advisory 11B-203.9 Employee work areas. Although areas used exclusively by employees for work are not required to be fully accessible, consider designing such areas to include non-required turning spaces, and provide accessible elements whenever possible. Under the ADA, employees with disabilities are entitled to reasonable accommodations in the workplace; accommodations can include alterations to spaces within the facility. Designing employee work areas to be more accessible at the outset will avoid more costly retrofits when current employees become temporarily or permanently disabled, or when new employees with disabilities are hired. Contact the Equal Employment Opportunity Commission (EEOC) at **www.eeoc.gov** for information about Title I of the ADA prohibiting discrimination against people with disabilities in the workplace. ■

***11B*-203.10 Raised refereeing, judging and scoring areas.** Raised structures used solely for refereeing, judging or scoring a sport shall not be required to comply with these requirements or to be on an accessible route. *An accessible route complying with Division 4 shall be provided to the ground- or floor-level entry points, where provided, of stairs, ladders or other means of reaching the raised elements or areas.*

***11B*-203.11 Water slides.** Water slides shall not be required to comply with these requirements or to be on an accessible route. *An accessible route complying with Division 4 shall be provided to the ground- or floor-level entry points, where provided, of stairs, ladders or other means of reaching the raised elements or areas.*

***11B*-203.12 Animal containment areas.** Animal containment areas that are not for public use shall not be required to comply with these requirements or to be on an accessible route. *Animal containment areas for public use shall be on an accessible route.*

USDOJ

Advisory 11B-203.12 Animal containment areas. Public circulation routes where animals may also travel, such as in petting zoos and passageways alongside animal pens in State fairs, are not eligible for the exception. ■

***11B*-203.13 Raised boxing or wrestling rings.** Raised boxing or wrestling rings shall not be required to comply with these requirements or to be on an accessible route. *An accessible route complying with Division 4 shall be provided to the ground- or floor-level entry points, where provided, of stairs, ladders or other means of reaching the raised elements or areas.*

***11B*-203.14 Raised diving boards and diving platforms.** Raised diving boards and diving platforms shall not be required to comply with these requirements or to be on an accessible route. *An accessible route complying with Division 4 shall be provided to the ground- or floor-level entry points, where provided, of stairs, ladders or other means of reaching the raised elements or areas.*

***11B*-204 Protruding objects**

***11B*-204.1 General.** Protruding objects on circulation paths shall comply with *Section 11B*-307.

Exceptions:

1. Within areas of sport activity, protruding objects on circulation paths shall not be required to comply with *Section 11B*-307.

2. Within play areas, protruding objects on circulation paths shall not be required to comply with *Section 11B*-307 provided that ground level accessible routes provide vertical clearance in compliance with *Section 11B*-1008.2.

***11B*-205 Operable parts**

***11B*-205.1 General.** Operable parts on accessible elements, accessible routes, and in accessible rooms and spaces shall comply with *Section 11B*-309.

Exceptions:

1. Operable parts that are intended for use only by service or maintenance personnel shall not be required to comply with *Section 11B*-309.

2. Electrical or communication receptacles serving a dedicated use shall not be required to comply with *Section 11B*-309.

3. ***Reserved.***

4. Floor electrical receptacles shall not be required to comply with *Section 11B*-309.

5. HVAC diffusers shall not be required to comply with *Section 11B*-309.

6. Except for light switches, where redundant controls are provided for a single element, one control in each space shall not be required to comply with *Section 11B*-309.

7. Cleats and other boat securement devices shall not be required to comply with *Section 11B*-309.3.

8. Exercise machines and exercise equipment shall not be required to comply with *Section 11B*-309.

USDOJ

Advisory 11B-205.1 General. Controls covered by Section 11B-205.1 include, but are not limited to, light switches, circuit breakers, duplexes and other convenience receptacles, environmental and appliance controls, plumbing fixture controls, and security and intercom systems. ■

***11B*-206 Accessible routes**

***11B*-206.1 General.** Accessible routes shall be provided in accordance with *Section 11B*-206 and shall comply with *Division* 4.

***11B*-206.2 Where required.** Accessible routes shall be provided where required by *Section 11B*-206.2.

***11B*-206.2.1 Site arrival points.** At least one accessible route shall be provided within the site from accessible parking spaces and accessible passenger loading zones; public streets and sidewalks; and public transportation stops to the accessible building or facility entrance they serve. *Where more than one route is provided, all routes must be accessible.*

Exceptions:

1. ***Reserved.***

2. An accessible route shall not be required between site arrival points and the building or facility entrance if the only means of access between them is a vehicular way not providing pedestrian access.

3. *General circulation paths shall be permitted when located in close proximity to an accessible route.*

USDOJ

Advisory 11B-206.2.1 Site arrival points. Each site arrival point must be connected by an accessible route to the accessible building entrance or entrances served. Where two or more similar site arrival points, such as bus stops, serve the same accessible entrance or entrances, both bus stops must be on accessible routes. In addition, the accessible routes must serve all of the accessible entrances on the site. ■

***11B*-206.2.2 Within a site.** At least one accessible route shall connect accessible buildings, accessible facilities, accessible elements, and accessible spaces that are on the same site.

Exception: An accessible route shall not be required between accessible buildings, accessible facilities, accessible elements, and accessible spaces if the only means of access between them is a vehicular way not providing pedestrian access.

USDOJ

Advisory 11B-206.2.2 Within a site. An accessible route is required to connect to the boundary of each area of sport activity. Examples of areas of sport activity include: soccer fields, basketball courts, baseball fields, running tracks, skating rinks, and the area surrounding a piece of gymnastic equipment. While the size of an area of sport activity may vary from sport to sport, each includes only the space needed to play. Where multiple sports fields or courts are provided, an accessible route is required to each field or area of sport activity. ■

***11B*-206.2.3 Multi-story buildings and facilities.** At least one accessible route shall connect each story and mezzanine in multi-story buildings and facilities.

Exceptions:

1. *The following types of privately funded multi-story buildings do not require a ramp or elevator above and below the first floor:*

   1.1. Multi-storied office buildings (other than the professional office of a health care provider) and passenger vehicle service stations less than three stories high or less than 3,000 square feet (279 m^2) per story.

   1.2. Any other privately funded multi-storied building that is not a shopping center, shopping mall or the professional office of a health care provider, or a terminal, depot

or other station used for specified public transportation, or an airport passenger terminal and that is less than three stories high or less than 3,000 square feet (279 m^2) per story if a reasonable portion of all facilities and accommodations normally sought and used by the public in such a building are accessible to and usable by persons with disabilities.

2. ***Reserved.***

3. In detention and correctional facilities, an accessible route shall not be required to connect stories where cells with mobility features required to comply with *Section 11B*-807.2, all common use areas serving cells with mobility features required to comply with *Section 11B*-807.2, and all public use areas are on an accessible route.

4. In residential facilities, an accessible route shall not be required to connect stories where residential dwelling units with mobility features required to comply with *Sections 11B*-809.2 through *11B*-809.4, *residential dwelling units with adaptable features complying with Chapter 11A, Division IV,* all common use areas serving residential dwelling units with mobility features required to comply with *Sections 11B*-809.2 through *11B*-809.4, *all common use areas serving residential dwelling units with adaptable features complying with Chapter 11A, Division IV,* and public use areas serving residential dwelling units are on an accessible route.

5. Within multi-story transient lodging guest rooms with mobility features required to comply with *Section 11B*-806.2, an accessible route shall not be required to connect stories provided that spaces complying with *Section 11B*-806.2 are on an accessible route and sleeping accommodations for two persons minimum are provided on a story served by an accessible route.

6. In air traffic control towers, an accessible route shall not be required to serve the cab and *the equipment areas on* the floor immediately below the cab.

7. ***Reserved.***

USDOJ

Advisory 11B-206.2.3 Multi-story buildings and facilities. Spaces and elements located on a level not required to be served by an accessible route must fully comply with this chapter. While a mezzanine may be a change in level, it is not a story. If an accessible route is required to connect stories within a building or facility, the accessible route must serve all mezzanines. ■

DSA

Advisory 11B-206.2.3 Multi-story buildings and facilities Exception 1.1. Elevators are the most common way to provide access in multistory office buildings. An exception is provided to the access requirement when office buildings are less than three stories in height or have fewer than 3000 square feet (sf) on every floor. For example, a 3-story office building with 4500 sf on the first floor, 2500 sf on the second floor and 1500 sf on the third floor would not qualify for the exception because one of the three floors is not less than 3000 sf. ■

DSA

Advisory 11B-206.2.3 Multi-story buildings and facilities Exceptions 1.1 and 1.2. Exceptions 1.1 and 1.2 are only available to privately-funded buildings and do not include a waiver of all other access features required on upper or lower floors. In other words the

exception is only for the elevator; everything else must comply. Many people with non-mobility (for example sight or hearing impairments) or semi-ambulatory conditions are served by the remaining access features required by this code. Many wheelchair users can get to upper floors through the use of crutches and other assistance, and can use their wheelchair brought to that floor where access to accessible restrooms, hallways, and accommodations are important. ■

DSA

Advisory 11B-206.2.3 Multi-story buildings and facilities Exception 1.2. What is a reasonable portion? Typically, one of each type of accommodation and functional space that is normally sought or used by the general public which is provided on inaccessible floors must be provided on the ground floor or an accessible floor; for example, equivalent meeting rooms, classrooms, etc. ■

DSA

Advisory 11B-206.2.3 Multi-story buildings and facilities Exception 1.2. In facilities that house a shopping center or shopping mall, or a professional office of a health care provider on an accessible ground floor, the floors that are above or below the ground floor and that do not house sales or rental establishments or a professional office of a health care provider, must still meet the accessibility requirements of this code, except for elevator service. ■

USDOJ

Advisory 11B-206.2.3 Multi-story buildings and facilities Exception 4. Where common use areas are provided for the use of residents, it is presumed that all such common use areas "serve" accessible dwelling units unless use is restricted to residents occupying certain dwelling units. For example, if all residents are permitted to use all laundry rooms, then all laundry rooms "serve" accessible dwelling units. However, if the laundry room on the first floor is restricted to use by residents on the first floor, and the second floor laundry room is for use by occupants of the second floor, then first floor accessible units are "served" only by laundry rooms on the first floor. In this example, an accessible route is not required to the second floor provided that all accessible units and all common use areas serving them are on the first floor. ■

***11B*-206.2.3.1 Stairs and escalators in existing buildings.** In alterations and additions, where an escalator or stair is provided where none existed previously and major structural modifications are necessary for the installation, an accessible route shall be provided between the levels served by the escalator or stair unless exempted by *Section 11B*-206.2.3 Exceptions 1 through 7.

11B-206.2.3.2 Distance to elevators. *In new construction of buildings where elevators are required by Section 11B-206.2.3, and which exceed 10,000 square feet (929 m^2) on any floor, an accessible means of vertical access via ramp, elevator or lift shall be provided within 200 feet (60,960 mm) of travel of each stair and each escalator. In existing buildings that exceed 10,000 square feet (929 m^2) on any floor and in which elevators are required by Section 11B-206.2.3, whenever a newly constructed means of vertical access is provided via stairs or an escalator, an accessible means of vertical access via ramp, elevator or lift shall be provided within 200 feet (60,960 mm) of travel of each new stair or escalator.*

Exception: *Stairs used solely for emergency egress.*

***11B*-206.2.4 Spaces and elements.** At least one accessible route shall connect accessible building or facility entrances with all accessible spaces and elements within the building or facility*, including mezzanines,* which are otherwise connected by a circulation path unless exempted by *Section 11B*-206.2.3 Exceptions 1 through 7.

Exceptions:

1. ***Reserved.***

2. In assembly areas with fixed seating required to comply with *Section 11B*-221, an accessible route shall not be required to serve fixed seating where wheelchair spaces required to be on an accessible route are not provided.

3. ***Reserved.***

USDOJ

Advisory 11B-206.2.4 Spaces and elements. Accessible routes must connect all spaces and elements required to be accessible including, but not limited to, raised areas and speaker platforms. ■

***11B*-206.2.5 *Restaurants, cafeterias*, *banquet facilities and bars*.** In *restaurants, cafeterias*, *banquet facilities, bars, and similar facilities,* an accessible route shall be provided to all *functional* areas, including raised or sunken areas, and outdoor areas.

Exceptions:

1. In *alterations of* buildings or facilities not required to provide an accessible route between stories, an accessible route shall not be required to a mezzanine dining area where the mezzanine contains less than 25 percent of the total combined area for seating and dining and where the same decor and services are provided in the accessible area.

2. ***Reserved.***

3. In sports facilities, tiered dining areas providing seating required to comply with *Section 11B*-221 shall be required to have accessible routes serving at least 25 percent of the dining area provided that accessible routes serve seating complying with *Section 11B*-221 and each tier is provided with the same services.

***11B*-206.2.6 Performance areas.** Where a circulation path directly connects a performance area to an assembly seating area, an accessible route shall directly connect the assembly seating area with the performance area. An accessible route shall be provided from performance areas to ancillary areas or facilities used by performers unless exempted by *Section 11B*-206.2.3 Exceptions 1 through 7.

DSA

Advisory 11B-206.2.6 Performance areas. Performance areas, including but not limited to, stages, platforms and orchestra pits, are treated as raised or lowered areas within a given story and all are required to be accessible by ramp, elevator or, when allowed, by platform lift. In compliance with Section 11B-206.7.1, wheelchair lifts may be used to access stages, platforms and orchestra pits used as performing areas. These areas are required to be accessible whether temporary or not.

Generally, the accessible route to the stage shall coincide with the route for the general public per Section 11B-206.3, to the maximum extent feasible. For example, requiring persons with

disabilities to go outside the building and reenter the building to gain access the stage when others have a direct route would not be considered coinciding. ■

***11B*-206.2.7 Press boxes.** Press boxes in assembly areas shall be on an accessible route.

Exceptions:

1. An accessible route shall not be required to press boxes in bleachers that have points of entry at only one level provided that the aggregate area of all press boxes is 500 square feet (46 m^2) maximum.

2. An accessible route shall not be required to free-standing press boxes that are elevated above grade 12 feet (3660 mm) minimum provided that the aggregate area of all press boxes is 500 square feet (46 m^2) maximum.

USDOJ

Advisory 11B-206.2.7 Press boxes Exception 2. Where a facility contains multiple assembly areas, the aggregate area of the press boxes in each assembly area is to be calculated separately. For example, if a university has a soccer stadium with three press boxes elevated 12 feet (3660 mm) or more above grade and each press box is 150 square feet (14 m^2), then the aggregate area of the soccer stadium press boxes is less than 500 square feet (46 m^2) and Exception 2 applies to the soccer stadium. If that same university also has a football stadium with two press boxes elevated 12 feet (3660 mm) or more above grade and one press box is 250 square feet (23 m^2), and the second is 275 square feet (26 m^2), then the aggregate area of the football stadium press boxes is more than 500 square feet (46 m^2) and Exception 2 does not apply to the football stadium. ■

***11B*-206.2.8 Employee work areas.** Common use circulation paths within employee work areas shall comply with *Section 11B*-402.

Exceptions:

1. ***Reserved.***

2. Common use circulation paths located within employee work areas that are an integral component of work area equipment shall not be required to comply with *Section 11B*-402.

3. Common use circulation paths located within exterior employee work areas that are fully exposed to the weather shall not be required to comply with *Section 11B*-402.

USDOJ

Advisory 11B-206.2.8 Employee work areas. Modular furniture that is not permanently installed is not directly subject to these requirements. The Department of Justice ADA regulations provide additional guidance regarding the relationship between these requirements and elements that are not part of the built environment. Additionally, the Equal Employment Opportunity Commission (EEOC) implements title I of the ADA which requires non-discrimination in the workplace. EEOC can provide guidance regarding employers' obligations to provide reasonable accommodations for employees with disabilities. ■

USDOJ

Advisory 11B-206.2.8 Employee work areas Exception 2. Large pieces of equipment,

such as electric turbines or water pumping apparatus, may have stairs and elevated walkways used for overseeing or monitoring purposes which are physically part of the turbine or pump. However, passenger elevators used for vertical transportation between stories are not considered "work area equipment" as defined in Chapter 2, Section 202. ■

***11B*-206.2.9 Amusement rides.** Amusement rides required to comply with *Section 11B*-234 shall provide accessible routes in accordance with *Section 11B*-206.2.9. Accessible routes serving amusement rides shall comply with *Division* 4 except as modified by *Section 11B*-1002.2.

***11B*-206.2.9.1 Load and unload areas.** Load and unload areas shall be on an accessible route. Where load and unload areas have more than one loading or unloading position, at least one loading and unloading position shall be on an accessible route.

***11B*-206.2.9.2 Wheelchair spaces, ride seats designed for transfer, and transfer devices.** When amusement rides are in the load and unload position, wheelchair spaces complying with *Section 11B*-1002.4, amusement ride seats designed for transfer complying with *Section 11B*-1002.5, and transfer devices complying with *Section 11B*-1002.6 shall be on an accessible route.

***11B*-206.2.10 Recreational boating facilities.** Boat slips required to comply with *Section 11B*-235.2 and boarding piers at boat launch ramps required to comply with *Section 11B*-235.3 shall be on an accessible route. Accessible routes serving recreational boating facilities shall comply with *Division* 4, except as modified by *Section 11B*-1003.2.

***11B*-206.2.11 Bowling lanes.** Where bowling lanes are provided, at least 5 percent, but no fewer than one of each type of bowling lane, shall be on an accessible route.

***11B*-206.2.12 Court sports.** In court sports, at least one accessible route shall directly connect both sides of the court.

***11B*-206.2.13 Exercise machines and equipment.** Exercise machines and equipment required to comply with *Section 11B*-236 shall be on an accessible route.

***11B*-206.2.14 Fishing piers and platforms.** Fishing piers and platforms shall be on an accessible route. Accessible routes serving fishing piers and platforms shall comply with *Division* 4 except as modified by *Section 11B*-1005.1.

***11B*-206.2.15 Golf facilities.** At least one accessible route shall connect accessible elements and spaces within the boundary of the golf course. In addition, accessible routes serving golf car rental areas; bag drop areas; course weather shelters complying with *Section 11B*-238.2.3; course toilet rooms; and practice putting greens, practice teeing grounds, and teeing stations at driving ranges complying with *Section 11B*-238.3 shall comply with *Division* 4 except as modified by *Section 11B*-1006.2.

Exception: Golf car passages complying with *Section 11B*-1006.3 shall be permitted to be used for all or part of accessible routes required by *Section 11B*-206.2.15.

***11B*-206.2.16 Miniature golf facilities.** Holes required to comply with *Section 11B*-239.2, including the start of play, shall be on an accessible route. Accessible routes serving miniature golf facilities shall comply with *Division* 4 except as modified by *Section 11B*-1007.2.

***11B*-206.2.17 Play areas.** Play areas shall provide accessible routes in accordance with *Section 11B*-206.2.17. Accessible routes serving play areas shall comply with *Division* 4 except as modified by *Section 11B*-1008.2.

***11B*-206.2.17.1 Ground level and elevated play components.** At least one accessible route shall be provided within the play area. The accessible route shall connect ground level play

components required to comply with *Section 11B*-240.2.1 and elevated play components required to comply with *Section 11B*-240.2.2, including entry and exit points of the play components.

***11B*-206.2.17.2 Soft contained play structures.** Where three or fewer entry points are provided for soft contained play structures, at least one entry point shall be on an accessible route. Where four or more entry points are provided for soft contained play structures, at least two entry points shall be on an accessible route.

11B-206.2.18 Area of sport activity. *An accessible route shall be provided to the boundary of each area of sport activity.*

***11B*-206.3 Location.** Accessible routes shall coincide with or be located in the same area as general circulation paths. Where circulation paths are interior, required accessible routes shall also be interior. *An accessible route shall not pass through kitchens, storage rooms, restrooms, closets or other spaces used for similar purposes, except as permitted by Chapter 10.*

USDOJ

Advisory 11B-206.3 Location. The accessible route must be in the same area as the general circulation path. This means that circulation paths, such as vehicular ways designed for pedestrian traffic, walks, and unpaved paths that are designed to be routinely used by pedestrians must be accessible or have an accessible route nearby. Additionally, accessible vertical interior circulation must be in the same area as stairs and escalators, not isolated in the back of the facility. ■

***11B*-206.4 Entrances.** Entrances shall be provided in accordance with *Section 11B*-206.4. Entrance doors, doorways, and gates shall comply with *Section 11B*-404 and shall be on an accessible route complying with *Section 11B*-402.

Exceptions:

1. ***Reserved.***

2. ***Reserved.***

***11B*-206.4.1 Entrances *and exterior ground floor exits*.** *All* entrances *and exterior ground-floor exits to buildings and facilities* shall comply with *Section 11B*-404.

Exceptions:

1. *Exterior ground floor exits serving smoke-proof enclosures, stairwells, and exit doors serving stairs only shall not be required to comply with Section 11B-404.*

2. *Exits in excess of those required by Chapter 10, and which are more than 24 inches (610 mm) above grade shall not be required to comply with Section 11B-404. Directional signage shall comply with Chapter 10, Section 1007.10.*

DSA

Advisory 11B-206.4.1 Entrances and exterior ground floor exits Exception. Exits in excess of those required by Chapter 10 and which are more than 24 inches above grade are exempted from the requirement for an accessible route complying with Section 404. The 2013 CBC Section 1011.4 requires such a door to be identified by a tactile exit sign with the following words “EXIT STAIR DOWN” or EXIT STAIR UP”. In an emergency situation much time can be wasted if persons with disabilities must travel the full distance to the inaccessible exit door before there is a sign posted indicating that the exit door is inaccessible. Placing a

directional sign or signs along the main accessible route or routes leading to the inaccessible exit door indicating the location of the nearest accessible exit door can save valuable travel time for persons with disabilities attempting to exit a building. The directional signs must comply with the requirements of Section 11B-703.5 for visual characters. ■

***11B*-206.4.2 Parking structure entrances.** Where direct access is provided for pedestrians from a parking structure to a building or facility entrance, each direct access to the building or facility entrance shall comply with *Section 11B*-404.

***11B*-206.4.3 Entrances from tunnels or elevated walkways.** Where direct access is provided for pedestrians from a pedestrian tunnel or elevated walkway to a building or facility, *all entrances* to the building or facility from each tunnel or walkway shall comply with *Section 11B*-404.

***11B*-206.4.4 Transportation facilities.** In addition to the requirements of *Sections 11B*-206.4.2, *11B*-206.4.3, and *11B*-206.4.5 through *11B*-206.4.9, transportation facilities shall provide entrances in accordance with *Section 11B*-206.4.4.

***11B*-206.4.4.1 Location.** In transportation facilities, where different entrances serve different transportation fixed routes or groups of fixed routes, *entrances* serving each fixed route or group of fixed routes shall comply with *Section 11B*-404.

Exception: Entrances to key stations and existing intercity rail stations retrofitted in accordance with 49 CFR 37.49 or 49 CFR 37.51 shall not be required to comply with *Section 11B*-206.4.4.1.

***11B*-206.4.4.2 Direct connections.** Direct connections to other facilities shall provide an accessible route complying with *Section 11B*-404 from the point of connection to boarding platforms and all transportation system elements required to be accessible. Any elements provided to facilitate future direct connections shall be on an accessible route connecting boarding platforms and all transportation system elements required to be accessible.

Exception: In key stations and existing intercity rail stations, existing direct connections shall not be required to comply with *Section 11B*-404.

***11B*-206.4.4.3 Key stations and intercity rail stations.** Key stations and existing intercity rail stations required by Subpart C of 49 CFR part 37 to be altered, shall have *entrances* complying with *Section 11B*-404.

***11B*-206.4.5 Tenant spaces.** *All entrances* to each tenancy in a facility shall comply with *Section 11B*-404.

Exception: Self-service storage facilities not required to comply with *Section 11B*-225.3 shall not be required to be on an accessible route.

***11B*-206.4.6 Residential dwelling unit primary entrance.** In residential dwelling units, at least one primary entrance shall comply with *Section 11B*-404. The primary entrance to a residential dwelling unit shall not be to a bedroom.

***11B*-206.4.7 Restricted entrances.** Where restricted entrances are provided to a building or facility, *all restricted entrances* to the building or facility shall comply with *Section 11B*-404.

***11B*-206.4.8 Service entrances.** If a service entrance is the only entrance to a building or to a tenancy in a facility, that entrance shall comply with *Section 11B*-404. *In existing buildings and facilities, a service entrance shall not be the sole accessible entrance unless it is the only entrance to a building or facility.*

***11B*-206.4.9 Entrances for inmates or detainees.** Where entrances used only by inmates or detainees and security personnel are provided at judicial facilities, detention facilities, or correctional facilities, at least one such entrance shall comply with *Section 11B*-404.

11B-206.4.10 Medical care and long-term care facilities. *Weather protection by a canopy or roof overhang shall be provided at a minimum of one accessible entrance to licensed medical care and licensed long-term care facilities where the period of stay may exceed twenty-four hours. The area of weather protection shall include the passenger loading zone complying with Section 11B-209.3 and the accessible route from the passenger loading zone to the accessible entrance it serves.*

DSA

Advisory 11B-206.4.10 Medical care and long-term care facilities. The purpose of this requirement is to permit a person to exit a vehicle and enter the building under cover. This section requires a covered entrance incorporating an accessible passenger loading zone which must also be covered. ■

***11B*-206.5 Doors, doorways, and gates.** Doors, doorways, and gates providing user passage shall be provided in accordance with *Section 11B*-206.5.

***11B*-206.5.1 Entrances.** Each entrance to a building or facility required to comply with *Section 11B*-206.4 shall *comply* with *Section 11B*-404.

***11B*-206.5.2 Rooms and spaces.** Within a building or facility, *every door, doorway or gate serving rooms and spaces* complying with *this chapter* shall comply with *Section 11B*-404.

***11B*-206.5.3 Transient lodging facilities.** In transient lodging facilities, entrances, doors, and doorways providing user passage into and within guest rooms that are not required to provide mobility features complying with *Section 11B*-806.2 shall comply with *Section 11B*-404.2.3.

Exception: Shower and sauna doors in guest rooms that are not required to provide mobility features complying with *Section 11B*-806.2 shall not be required to comply with *Section 11B*-404.2.3.

***11B*-206.5.4 Residential dwelling units.** In residential dwelling units required to provide mobility features complying with *Sections 11B*-809.2 through *11B*-809.4, all doors and doorways providing user passage shall comply with *Section 11B*-404.

***11B*-206.6 Elevators.** Elevators provided for passengers shall comply with *Section 11B*-407. Where multiple elevators are provided, each elevator shall comply with *Section 11B*-407.

Exceptions:

1. In a building or facility permitted to use the exceptions to *Section 11B*-206.2.3 or permitted by *Section 11B*-206.7 to use a platform lift, elevators complying with *Section 11B*-408 shall be permitted.

2. Elevators complying with *Section 11B*-408 or *11B*-409 shall be permitted in multi-story residential dwelling units. *Elevators provided as a means of access within a private residence shall be installed so that they are not accessible to the general public or to other occupants of the building.*

3. *Destination-oriented elevators complying with Section 11B-411 shall be permitted.*

***11B*-206.6.1 Existing elevators.** Where elements of existing elevators are altered, the same element shall also be altered in all elevators that are programmed to respond to the same hall call control as

the altered elevator and shall comply with the requirements of *Section 11B*-407 for the altered element.

> ***Exception:*** *Where a group of existing elevators are altered into a destination-oriented elevator system, or where elements of existing destination-oriented elevators are altered, the same elements shall also be altered in all elevators that are programmed to respond to the same call console or group of call consoles and shall comply with the requirements of Section 11B-411 for the altered elements.*

***11B*-206.7 Platform lifts.** Platform lifts shall comply with *Section 11B*-410. Platform lifts shall be permitted as a component of an accessible route in new construction in accordance with *Section 11B*-206.7. Platform lifts shall be permitted as a component of an accessible route in an existing building or facility.

***11B*-206.7.1 Performance areas and speakers' platforms.** Platform lifts shall be permitted to provide accessible routes to performance areas and speakers' platforms.

***11B*-206.7.2 Wheelchair spaces.** Platform lifts shall be permitted to provide an accessible route to comply with the wheelchair space dispersion and line-of-sight requirements of *Sections 11B*-221 and *11B*-802.

***11B*-206.7.3 Incidental spaces.** Platform lifts shall be permitted to provide an accessible route to incidental spaces which are not public use spaces and which are occupied by five persons maximum.

***11B*-206.7.4 Judicial spaces.** Platform lifts shall be permitted to provide an accessible route to: jury boxes and witness stands; raised courtroom stations including, judges' benches, clerks' stations, bailiffs' stations, deputy clerks' stations, and court reporters' stations; and to depressed areas such as the well of a court.

***11B*-206.7.5 Existing site constraints.** Platform lifts shall be permitted where existing exterior site constraints make use of a ramp or elevator infeasible.

> **USDOJ**
>
> **Advisory 11B-206.7.5 Existing site constraints.** This exception applies where topography or other similar existing site constraints necessitate the use of a platform lift as the only feasible alternative. While the site constraint must reflect exterior conditions, the lift can be installed in the interior of a building. For example, a new building constructed between and connected to two existing buildings may have insufficient space to coordinate floor levels and also to provide ramped entry from the public way. In this example, an exterior or interior platform lift could be used to provide an accessible entrance or to coordinate one or more interior floor levels. ■

***11B*-206.7.6 Guest rooms and residential dwelling units.** Platform lifts shall be permitted to connect levels within transient lodging guest rooms required to provide mobility features complying with *Section 11B*-806.2 or residential dwelling units required to provide mobility features complying with *Sections 11B*-809.2 through *11B*-809.4 *and adaptable features complying with Chapter 11A, Division IV*.

***11B*-206.7.7 Amusement rides.** Platform lifts shall be permitted to provide accessible routes to load and unload areas serving amusement rides.

***11B*-206.7.8 Play areas.** Platform lifts shall be permitted to provide accessible routes to play components or soft contained play structures.

***11B*-206.7.9 Team or player seating.** Platform lifts shall be permitted to provide accessible routes to team or player seating areas serving areas of sport activity.

USDOJ

Advisory 11B-206.7.9 Team or player seating. While the use of platform lifts is allowed, ramps are recommended to provide access to player seating areas serving an area of sport activity. ■

***11B*-206.7.10 Recreational boating facilities and fishing piers and platforms.** Platform lifts shall be permitted to be used instead of gangways that are part of accessible routes serving recreational boating facilities and fishing piers and platforms.

***11B*-206.8 Security barriers.** Security barriers, including but not limited to, security bollards and security check points, shall not obstruct a required accessible route or accessible means of egress.

Exception: Where security barriers incorporate elements that cannot comply with these requirements such as certain metal detectors, fluoroscopes, or other similar devices, the accessible route shall be permitted to be located adjacent to security screening devices. The accessible route shall permit persons with disabilities passing around security barriers to maintain visual contact with their personal items to the same extent provided others passing through the security barrier.

***11B*-207 Accessible means of egress**

***11B*-207.1 General.** Means of egress shall comply with *Chapter 10, Section 1007*.

Exceptions:

1. Where means of egress are permitted by local building or life safety codes to share a common path of egress travel, accessible means of egress shall be permitted to share a common path of egress travel.

2. Areas of refuge shall not be required in detention and correctional facilities.

***11B*-207.2 Platform lifts.** Standby power shall be provided for platform lifts permitted by *Chapter 10, Section 1007.5* to serve as a part of an accessible means of egress. *To ensure continued operation in case of primary power loss, platform lifts shall be provided with standby power or with self-rechargeable battery power that provides sufficient power to operate all platform lift functions for a minimum of five upward and downward trips.*

***11B*-208 Parking spaces**

***11B*-208.1 General.** Where parking spaces are provided, parking spaces shall be provided in accordance with *Section 11B*-208.

Exception: Parking spaces used exclusively for buses, trucks, other delivery vehicles, or vehicular impound shall not be required to comply with *Section 11B*-208 provided that lots accessed by the public are provided with a passenger loading zone complying with *Section 11B*-503.)

***11B*-208.2 Minimum number.** Parking spaces complying with *Section 11B*-502 shall be provided in accordance with Table *11B*-208.2 except as required by *Sections 11B*-208.2.1, *11B*-208.2.2, and *11B*-208.2.3. Where more than one parking facility is provided on a site, the number of accessible spaces provided on the site shall be calculated according to the number of spaces required for each parking facility.

Table *11B*-208.2 Parking Spaces

Total Number of Parking Spaces Provided in Parking Facility	Minimum Number of Required Accessible Parking Spaces
1 to 25	1
26 to 50	2
51 to 75	3
76 to 100	4
101 to 150	5
151 to 200	6
201 to 300	7
301 to 400	8
401 to 500	9
501 to 1000	2 percent of total
1001 and over	20, plus 1 for each 100, or fraction thereof, over 1000

USDOJ

Advisory 11B-208.2 Minimum number. The term "parking facility" is used in Section 11B-208.2 instead of the term "parking lot" so that it is clear that both parking lots and parking structures are required to comply with this section. The number of parking spaces required to be accessible is to be calculated separately for each parking facility; the required number is not to be based on the total number of parking spaces provided in all of the parking facilities provided on the site. ■

DSA

Advisory 11B-208.2 Minimum number. Accessible spaces can be provided in other facilities or locations, or, in the case of parking structures, on one level only when equal or greater access is provided in terms of proximity to an accessible entrance, cost, and convenience. For example, accessible spaces required for outlying parking facilities may be located in a parking facility closer to an accessible entrance. The minimum number of spaces must still be determined separately for each facility even if the spaces are to be provided in other facilities or locations. Accessible spaces may be grouped on one level of a parking structure in order to achieve greater access. However, where parking levels serve different building entrances, accessible spaces should be dispersed so that access is provided to each entrance. ■

***11B*-208.2.1 Hospital outpatient facilities.** Ten percent of patient and visitor parking spaces provided to serve hospital outpatient facilities*, and free-standing buildings providing outpatient clinical services of a hospital,* shall comply with *Section 11B*-502.

USDOJ

Advisory 11B-208.2.1 Hospital outpatient facilities. The term "outpatient facility" is not defined in this code but is intended to cover facilities or units that are located in hospitals and that provide regular and continuing medical treatment without an overnight stay. Doctors' offices, independent clinics, or other facilities not located in hospitals are not considered hospital outpatient facilities for purposes of this chapter. ■

DSA

Advisory 11B-208.2.1 Hospital outpatient facilities. The higher percentages required for hospital outpatient facilities or rehabilitation facilities specializing in treating conditions that affect mobility and outpatient physical therapy facilities (indicated in Section 11B-208.2.2 below) are intended primarily for visitor and patient parking. If there are separate lots for visitors or patients and employees, the 10% or 20% requirement shall be applied to the visitor/patient lot while accessible parking could be provided in the employee lot according to the general scoping requirement in Table 11B-208.2. If a lot serves both visitors or patients and employees, 10% or 20% of the spaces intended for use by visitors or patients must be accessible.

At hospitals or other facilities where parking does not specifically serve an outpatient unit, only a portion of the lot would need to comply with the 10% scoping requirement. A local zoning code that requires a minimum number of parking spaces according to occupancy type and square footage may be an appropriate guide in assessing the number of spaces in the lot that "belong" to the outpatient unit. These spaces would be held to the 10% requirement while the rest of the lot would be subject to the general scoping requirement in the table. Those accessible spaces required for the outpatient unit should be located at the accessible entrance serving the unit. This method may also be used in applying the 20% requirement to hospitals or other facilities where only a portion or unit provides specialized rehabilitation or physical therapy treatment or services for persons with mobility impairments. ■

***11B*-208.2.2 Rehabilitation facilities and outpatient physical therapy facilities.** Twenty percent of patient and visitor parking spaces provided to serve rehabilitation facilities specializing in treating conditions that affect mobility and outpatient physical therapy facilities shall comply with *Section 11B*-502.

USDOJ

Advisory 11B-208.2.2 Rehabilitation facilities and outpatient physical therapy facilities. Conditions that affect mobility include conditions requiring the use or assistance of a brace, cane, crutch, prosthetic device, wheelchair, or powered mobility aid; arthritic, neurological, or orthopedic conditions that severely limit one's ability to walk; respiratory diseases and other conditions which may require the use of portable oxygen; and cardiac conditions that impose significant functional limitations. ■

***11B*-208.2.3 Residential facilities.** Parking spaces provided to serve residential facilities shall comply with *Section 11B*-208.2.3.

***11B*-208.2.3.1 Parking for residents.** Where at least one parking space is provided for each residential dwelling unit, at least one parking space complying with *Section 11B*-502 shall be provided for each residential dwelling unit required to provide mobility features complying with *Sections 11B*-809.2 through *11B*-809.4.

***11B*-208.2.3.2 Additional parking spaces for residents.** Where the total number of parking spaces provided for each residential dwelling unit exceeds one parking space per residential dwelling unit, 2 percent, but no fewer than one space, of all the parking spaces not covered by *Section 11B*-208.2.3.1 shall comply with *Section 11B*-502.

***11B*-208.2.3.3 Parking for guests, employees, and other non-residents.** Where parking spaces are provided for persons other than residents, parking shall be provided in accordance with Table *11B*-208.2.

***NOTE:** When assigned parking is provided, Chapter 11A indicates designated accessible parking for the adaptable residential dwelling units shall be provided on requests of residents with*

disabilities on the same terms and with the full range of choices (e.g., off-street parking, carport or garage) that are available to other residents.

***11B*-208.2.4 Van parking spaces.** For every six or fraction of six parking spaces required by *Section 11B*-208.2 to comply with *Section 11B*-502, at least one shall be a van parking space complying with *Section 11B*-502.

***11B*-208.3 Location.** Parking facilities shall comply with *Section 11B*-208.3.

***11B*-208.3.1 General.** Parking spaces complying with *Section 11B*-502 that serve a particular building or facility shall be located on the shortest accessible route from parking to an entrance complying with *Section 11B*-206.4. Where parking serves more than one accessible entrance, parking spaces complying with *Section 11B*-502 shall be dispersed and located on the shortest accessible route to the accessible entrances. In parking facilities that do not serve a particular building or facility, parking spaces complying with *Section 11B*-502 shall be located on the shortest accessible route to an accessible pedestrian entrance of the parking facility.

Exceptions:

1. All van parking spaces shall be permitted to be grouped on one level within a multi-story parking facility.

2. Parking spaces shall be permitted to be located in different parking facilities if substantially equivalent or greater accessibility is provided in terms of distance from an accessible entrance or entrances, parking fee, and user convenience.

USDOJ

Advisory 11B-208.3.1 General Exception 2. Factors that could affect "user convenience" include, but are not limited to, protection from the weather, security, lighting, and comparative maintenance of the alternative parking site. ■

***11B*-208.3.2 Residential facilities.** In residential facilities containing residential dwelling units required to provide mobility features complying with *Sections 11B*-809.2 through *11B*-809.4, *and adaptable features complying with Chapter 11A, Division IV* parking spaces provided in accordance with *Section 11B*-208.2.3.1 shall be located on the shortest accessible route to the residential dwelling unit entrance they serve. Spaces provided in accordance with *Section 11B*-208.2.3.2 shall be dispersed throughout all types of parking provided for the residential dwelling units.

Exception: Parking spaces provided in accordance with *Section 11B*-208.2.3.2 shall not be required to be dispersed throughout all types of parking if substantially equivalent or greater accessibility is provided in terms of distance from an accessible entrance, parking fee, and user convenience.

USDOJ

Advisory 11B-208.3.2 Residential facilities Exception. Factors that could affect "user convenience" include, but are not limited to, protection from the weather, security, lighting, and comparative maintenance of the alternative parking site. ■

11B-208.3.3 Private garages accessory to residential dwelling units. *Private garages accessory to residential dwelling units shall comply with Section 11B-208.3. Private garages include individual garages and multiple individual garages grouped together.*

11B-208.3.3.1 *Detached private garages accessory to residential dwelling units, shall be*

accessible as required by Section 11B-208.3.

11B-208.3.3.2 *Attached private garages directly serving a single residential dwelling unit shall provide at least one of the following options:*

1. *A door leading directly from the residential dwelling unit which immediately enters the garage.*
2. *An accessible route from the residential dwelling unit to an exterior door entering the garage.*
3. *An accessible route from the residential dwelling unit's primary entry door to the vehicular entrance at the garage.*

***11B*-209 Passenger loading zones and bus stops**

***11B*-209.1 General.** Passenger loading zones shall be provided in accordance with *Section 11B*-209.

***11B*-209.2 Type.** Where provided, passenger loading zones shall comply with *Section 11B*-209.2.

***11B*-209.2.1 Passenger loading zones.** Passenger loading zones, except those required to comply with *Sections 11B*-209.2.2 and *11B*-209.2.3, shall provide at least one passenger loading zone complying with *Section 11B*-503 in every continuous 100 linear feet (*30480 mm*) of loading zone space, or fraction thereof.

***11B*-209.2.2 Bus loading zones.** In bus loading zones restricted to use by designated or specified public transportation vehicles, each bus bay, bus stop, or other area designated for lift or ramp deployment shall comply with *Section 11B*-810.2.

USDOJ

Advisory 11B-209.2.2 Bus loading zones. The terms "designated public transportation" and "specified public transportation" are defined by the Department of Transportation at 49 CFR 37.3 in regulations implementing the Americans with Disabilities Act. These terms refer to public transportation services provided by public or private entities, respectively. For example, designated public transportation vehicles include buses and vans operated by public transit agencies, while specified public transportation vehicles include tour and charter buses, taxis and limousines, and hotel shuttles operated by private entities. ■

***11B*-209.2.3 On-street bus stops.** On-street bus stops shall comply with *Section 11B*-810.2 to the maximum extent practicable.

***11B*-209.3 Medical care and long-term care facilities.** At least one passenger loading zone complying with *Section 11B*-503 shall be provided at an accessible entrance to licensed medical care and licensed long-term care facilities where the period of stay *may exceed* twenty-four hours.

***11B*-209.4 Valet parking.** Parking facilities that provide valet parking services shall provide at least one passenger loading zone complying with *Section 11B*-503. *The parking requirements of Section 11B-208.1 apply to facilities with valet parking.*

DSA

Advisory 11B-209.4 Valet parking. Valet parking does not eliminate the requirement to provide accessible parking spaces. Some vehicles may be adapted with hand controls or lack a driver's seat, and may not be operable by a valet parking attendant. The parking space requirements of Sections 11B-208 and 11B-502 apply to facilities with valet parking, including

the requirement for an accessible route of travel to the entrance of the facility. In addition, when valet parking is provided, a passenger loading zone complying with Section 11B-503 shall be located on an accessible route of travel to the entrance of the facility. ■

***11B*-209.5 Mechanical access parking garages.** Mechanical access parking garages shall provide at least one passenger loading zone complying with *Section 11B*-503 at vehicle drop-off and vehicle pick-up areas.

***11B*-210 Stairways**

***11B*-210.1 General.** Interior and exterior stairs shall comply with *Section 11B*-504.

Exceptions:

1. In detention and correctional facilities, stairs that are not located in public use areas shall not be required to comply with *Section 11B*-504.

2. In alterations, stairs between levels that are connected by an accessible route shall not be required to comply with *Section 11B*-504, except that *striping complying with Section 11B-504.4.1 and* handrails complying with *Section 11B*-505 shall be provided when the stairs are altered.

3. In assembly areas, aisle stairs shall not be required to comply with *Section 11B*-504 *except that striping complying with Section 11B-504.4.1 shall be provided*.

4. Stairs that connect play components shall not be required to comply with *Section 11B*-504 *except that striping complying with Section 11B-504.4.1 shall be provided*.

***11B*-211 Drinking fountains**

***11B*-211.1 General.** Where drinking fountains are provided on an exterior site, on a floor, or within a secured area they shall be provided in accordance with *Section 11B*-211.

Exception: In detention or correctional facilities, drinking fountains only serving holding or housing cells not required to comply with *Section 11B*-232 shall not be required to comply with *Section 11B*-211.

***11B*-211.2 Minimum number.** No fewer than two drinking fountains shall be provided. *When provided, one* drinking fountain shall comply with *Sections 11B*-602.1 through *11B*-602.6, *11B-602.8 and 11B-602.9* and one drinking fountain shall comply with *Sections 11B*-602.7 *and 11B-602.9*.

Exception: Where a single drinking fountain complies with *Sections 11B*-602.1 through *11B*-602.9, it shall be permitted to be substituted for two separate drinking fountains.

DSA

Advisory 11B-211.2 Minimum number. The 2013 California Plumbing Code (CPC), Table 4-1 provides minimum plumbing fixture requirements for new buildings, and changes of occupancy or use in an existing building resulting in increased occupant load. CPC Table 4-1 should be consulted in conjunction with the requirements of this section. ■

***11B*-211.3 More than minimum number.** Where more than the minimum number of drinking fountains specified in *Section 11B*-211.2 are provided, 50 percent of the total number of drinking fountains provided shall comply with *Sections 11B*-602.1 through *11B*-602.6, *11B-602.8 and 11B-602.9,* and 50 percent of the total number of drinking fountains provided shall comply with *Sections 11B*-602.7 *and 11B-602.9*.

Exception: Where 50 percent of the drinking fountains yields a fraction, 50 percent shall be permitted to be rounded up or down provided that the total number of drinking fountains complying with *Section 11B*-211 equals 100 percent of drinking fountains.

***11B*-212 Kitchens, kitchenettes, *wet bars* and sinks**

***11B*-212.1 General.** Where provided, kitchens, kitchenettes, *wet bars* and sinks shall comply with *Section 11B*-212.

***11B*-212.2 Kitchens, kitchenettes, *and wet bars*.** Kitchens, kitchenettes *and wet bars* shall comply with *Section 11B*-804.

***11B*-212.3 Sinks.** Where sinks are provided, at least 5 percent, but no fewer than one, of each type provided in each accessible room or space shall comply with *Section 11B*-606.

Exceptions:

1. Mop, service *or scullery* sinks shall not be required to comply with *Section 11B*-212.3.

2. *Scrub sinks, as defined in California Plumbing Code Section 221.0, shall not be required to comply with Section 11B-606.*

***11B*-213 Toilet facilities and bathing facilities**

***11B*-213.1 General.** Where toilet facilities and bathing facilities are provided, they shall comply with *Section 11B*-213. Where toilet facilities and bathing facilities are provided in facilities permitted by *Section 11B*-206.2.3 *Exception* 1 not to connect stories by an accessible route, toilet facilities and bathing facilities shall be provided on a story connected by an accessible route to an accessible entrance.

11B-213.1.1 Toilet facilities for designated user groups. *Where separate toilet facilities are provided for the exclusive use of separate user groups, the toilet facilities serving each user group shall comply with Section 11B-213.*

***11B*-213.2 Toilet rooms and bathing rooms.** Where toilet rooms are provided, each toilet room shall comply with *Section 11B*-603. Where bathing rooms are provided, each bathing room shall comply with *Section 11B*-603.

Exceptions:

1. In alterations where it is technically infeasible to comply with *Section 11B*-603, altering existing toilet or bathing rooms shall not be required where a single unisex toilet room or bathing room complying with *Section 11B*-213.2.1 is provided and located in the same area and on the same floor as existing inaccessible toilet or bathing rooms.

2. ***Reserved.***

3. Where multiple single user portable toilet or bathing units are clustered at a single location, 5 percent*, but no fewer than one,* of the toilet units and bathing units at each cluster shall comply with *Section 11B*-603. Portable toilet units and bathing units complying with *Section 11B*-603 shall be identified by the International Symbol of Accessibility complying with *Section 11B*-703.7.2.1.

4. Where multiple single user toilet rooms are clustered at a single location, 50 percent*, but no fewer than one,* of the single user toilet rooms for each use at each cluster shall comply with *Section 11B*-603.

5. *Where toilet and bathing rooms are provided in guest rooms that are not required to provide mobility features complying with Section 11B-806.2, toilet and bathing fixtures shall only be required to comply with Section 11B-603.6.*

USDOJ

Advisory 11B-213.2 Toilet rooms and bathing rooms. These requirements allow the use of unisex (or single-user) toilet rooms in alterations when technical infeasibility can be demonstrated. Unisex toilet rooms benefit people who use opposite sex personal care assistants. For this reason, it is advantageous to install unisex toilet rooms in addition to accessible single-sex toilet rooms in new facilities. ■

USDOJ

Advisory 11B-213.2 Toilet rooms and bathing rooms Exceptions 3 and 4. A "cluster" is a group of toilet rooms proximate to one another. Generally, toilet rooms in a cluster are within sight of, or adjacent to, one another. ■

***11B*-213.2.1 Unisex (single-use or family) toilet and unisex bathing rooms.** Unisex toilet rooms shall contain not more than one lavatory, and *not more than* two water closets without urinals or one water closet and one urinal. Unisex bathing rooms shall contain one shower or one shower and one bathtub, one lavatory, and one water closet. Doors to unisex toilet rooms and unisex bathing rooms shall have privacy latches.

***11B-213.2.2 Unisex (patient)toilet rooms in medical care and long-term care facilities**. Common-use unisex toilet rooms for exclusive patient use not located within patient bedrooms shall contain a lavatory and one water closet.*

***11B-213.2.3 Unisex (patient) bathing rooms in medical care and long-term care facilities**. Common-use unisex bathing rooms for exclusive patient use not located within patient bedrooms shall contain one shower or one bathtub, one lavatory, and one water closet.*

***11B*-213.3 Plumbing fixtures and accessories.** Plumbing fixtures and accessories provided in a toilet room or bathing room required to comply with *Section 11B*-213.2 shall comply with *Section 11B*-213.3.

DSA

Advisory 11B-213.3 Plumbing fixtures and accessories. The 2013 California Plumbing Code (CPC), Table 4-1 provides minimum plumbing fixture requirements for new buildings, and changes of occupancy or use in an existing building resulting in increased occupant load. CPC Table 4-1 should be consulted in conjunction with the requirements of this section. ■

***11B*-213.3.1 Toilet compartments.** Where toilet compartments are provided, at least *five percent but no fewer than* one toilet compartment shall comply with *Section 11B*-604.8.1. In addition to the *compartments* required to comply with *Section 11B*-604.8.1, where six or more toilet compartments are provided, or where the combination of urinals and water closets totals six or more fixtures*, toilet compartments complying with Section 11B-604.8.2 shall be provided in the same quantity as the toilet compartments required to comply with Section 11B-604.8.1*.

USDOJ

Advisory 11B-213.3.1 Toilet compartments. A toilet compartment is a partitioned space that is located within a toilet room, and that normally contains no more than one water closet.

A toilet compartment may also contain a lavatory. Full-height partitions and door assemblies can comprise toilet compartments where the minimum required spaces are provided within the compartment. ■

***11B*-213.3.2 Water closets.** Where water closets are provided, at least *five percent but no fewer than* one shall comply with *Section 11B*-604.

***11B*-213.3.3 Urinals.** Where *one or more urinals are* provided, at least *ten percent but no fewer than* one shall comply with *Section 11B*-605.

***11B*-213.3.4 Lavatories.** Where lavatories are provided, at least *ten percent but no fewer than* one shall comply with *Section 11B*-606 and shall not be located in a toilet compartment.

***11B*-213.3.5 Mirrors.** Where mirrors are provided, at least one shall comply with *Section 11B*-603.3.

***11B*-213.3.6 Bathing facilities.** Where bathtubs or showers are provided, at least one bathtub complying with *Section 11B*-607 or at least one shower complying with *Section 11B*-608 shall be provided. *Where two or more accessible showers are provided within the same functional area, at least one shower shall be opposite hand from the other or others (that is, one left-hand controls versus right-hand controls).*

***11B*-213.3.7 Coat hooks and shelves.** Where coat hooks or shelves are provided in toilet rooms without toilet compartments, at least one of each type shall comply with *Section 11B*-603.4. Where coat hooks or shelves are provided in toilet compartments, at least one of each type complying with *Section 11B*-604.8.3 shall be provided in toilet compartments required to comply with *Section 11B*-213.3.1. Where coat hooks or shelves are provided in bathing facilities, at least one of each type complying with *Section 11B*-603.4 shall serve fixtures required to comply with *Section 11B*-213.3.6.

***11B*-214 Washing machines and clothes dryers**

***11B*-214.1 General.** Where provided, washing machines and clothes dryers shall comply with *Section 11B*-214.

***11B*-214.2 Washing machines.** Where three or fewer washing machines are provided, at least one shall comply with *Section 11B*-611. Where more than three washing machines are provided, at least two shall comply with *Section 11B*-611.

***11B*-214.3 Clothes dryers.** Where three or fewer clothes dryers are provided, at least one shall comply with *Section 11B*-611. Where more than three clothes dryers are provided, at least two shall comply with *Section 11B*-611.

11B*-215 Fire alarm systems *and carbon monoxide alarm systems

***11B*-215.1 General.** Where fire alarm systems *and carbon monoxide alarm systems* provide audible alarm coverage, alarms shall comply with *Section 11B*-215.

Exception: In existing facilities, visible alarms *for fire alarm systems* shall not be required except where an existing fire alarm system is upgraded or replaced, or a new fire alarm system is installed.

USDOJ

Advisory 11B-215.1 General. Unlike audible alarms, visible alarms must be located within the space they serve so that the signal is visible. Facility alarm systems (other than fire alarm systems) such as those used for tornado warnings and other emergencies are not required to comply with the technical criteria for alarms in Section 11B-702. Every effort should be made to ensure that such alarms can be differentiated in their signal from fire alarms systems and

that people who need to be notified of emergencies are adequately safeguarded. Consult local fire departments and prepare evacuation plans taking into consideration the needs of every building occupant, including people with disabilities. ■

***11B*-215.2 Public and common use areas.** Alarms in public use areas and common use areas shall comply with *Chapter 9, Section 907.5.2.3.1*.

***11B*-215.3 Employee work areas.** Where employee work areas have audible alarm coverage, the wiring system shall be designed so that visible alarms complying with *Chapter 9, Section 907.5.2.3.2* can be integrated into the alarm system.

***11B*-215.4 Transient lodging.** Guest rooms required to comply with *Section 11B*-224.4 shall provide *fire* alarms complying with *Chapter 9, Section 907.5.2.3.3, and carbon monoxide alarms, where provided, complying with Chapter 4.*

***11B*-215.5 Residential facilities.** Where provided in residential dwelling units required to comply with *Section 11B*-809.5, *fire* alarms shall comply with *Chapter 9, Section 907.5.2.3.4 and carbon monoxide alarms shall comply with Chapter 4.*

***11B*-216 Signs**

***11B*-216.1 General.** *New or altered signs* shall be provided in accordance with *Section 11B*-216 and shall comply with *Section 11B*-703. *The addition of or replacement of signs shall not trigger any additional path of travel requirements.*

Exceptions:

1. Building directories, menus, seat and row designations in assembly areas, occupant names, building addresses, and company names and logos shall not be required to comply with *Section 11B*-216.

2. ***Reserved.***

3. Temporary, 7 days or less, signs shall not be required to comply with *Section 11B*-216.

4. In detention and correctional facilities, signs not located in public use areas shall not be required to comply with *Section 11B*-216.

***11B*-216.2 Designations.** Interior and exterior signs identifying permanent rooms and spaces shall comply with *Sections 11B*-703.1, *11B*-703.2, *11B-703.3* and *11B*-703.5. Where pictograms are provided as designations of permanent rooms and spaces, the pictograms shall comply with *Section 11B*-703.6 and shall have text descriptors complying with *Sections 11B*-703.2 and *11B*-703.5.

Exception: Exterior signs that are not located at the door to the space they serve shall not be required to comply with *Section 11B*-703.2.

USDOJ

Advisory 11B-216.2 Designations. Section 11B-216.2 applies to signs that provide designations, labels, or names for interior rooms or spaces where the sign is not likely to change over time. Examples include interior signs labeling restrooms, room and floor numbers or letters, and room names. Tactile text descriptors are required for pictograms that are provided to label or identify a permanent room or space. Pictograms that provide information about a room or space, such as "no smoking," occupant logos, and the International Symbol of Accessibility, are not required to have text descriptors. ■

DSA

Advisory 11B-216.2 Designations. People with visual impairments benefit from tactile signs containing raised characters and/or symbols and accompanying Braille. They also benefit from an orderly scheme of consecutive room numbers for way-finding, though way-finding is not required by code. Tactile exit signs complying with Chapter 10 contribute to a safe environment for people with visual impairments. ■

***11B*-216.3 Directional and informational signs.** Signs that provide direction to or information about interior *and exterior* spaces and facilities of the site shall comply with *Section 11B*-703.5.

USDOJ

Advisory 11B-216.3 Directional and informational signs. Information about interior and exterior spaces and facilities includes rules of conduct, occupant load, and similar signs. Signs providing direction to rooms or spaces include those that identify egress routes. ■

***11B*-216.4 Means of egress.** Signs for means of egress shall comply with *Section 11B*-216.4.

***11B*-216.4.1 Exit doors.** *Signs required by Chapter 10, Section 1011.4 at doors to* exit passageways, exit discharge, and exit stairways shall *comply* with *Sections 11B*-703.1, *11B*-703.2, *11B-703.3* and *11B*-703.5.

USDOJ

Advisory 11B-216.4.1 Exit doors. An exit passageway is a horizontal exit component that is separated from the interior spaces of the building by fire-resistance-rated construction and that leads to the exit discharge or public way. The exit discharge is that portion of an egress system between the termination of an exit and a public way. ■

***11B*-216.4.2 Areas of refuge *and exterior areas for assisted rescue*.** Signs required by *Chapter 10, Section 1007.11* to provide instructions in areas of refuge shall comply with *Section 11B*-703.5. *Signs required by Chapter 10, Section 1007.9 at doors to areas of refuge and exterior areas for assisted rescue shall comply with Sections 11B-703.1, 11B-703.2, 11B-703.3 and 11B-703.5 and include an International Symbol of Accessibility complying with Section 11B-703.7.2.1.*

***11B*-216.4.3 Directional signs.** Signs required by *Chapter 10, Section 1007.10* to provide directions to accessible means of egress shall comply with *Section 11B*-703.5.

11B-216.4.4 Delayed egress locks. *Signs required by Chapter 10, Section 1008.1.9.7, item 5.1 at doors with delayed egress locks shall comply with Sections 11B-703.1, 11B-703.2, 11B-703.3 and 11B-703.5.*

***11B*-216.5 Parking.** *Signs identifying parking spaces and signs within parking facilities shall comply with Section 11B-216.5.*

11B-216.5.1 Parking spaces. Parking spaces complying with *Section 11B*-502 shall be identified by signs complying with *Section 11B*-502.6.

Exceptions:

1. ***Reserved.***

2. In residential facilities, where parking spaces are assigned to specific residential dwelling units, identification of accessible parking spaces shall not be required.

11B-216.5.2 Parking facilities. *Signs intended for use by pedestrians within parking facilities, including directional or informational signs indicating parking sections or levels, shall comply with the requirements of Section 11B-216.*

***11B*-216.6 Entrances.** *In existing buildings and facilities where* not all entrances comply with *Section 11B*-404, entrances complying with *Section 11B*-404 shall be identified by the International Symbol of Accessibility complying with *Section 11B*-703.7.2.1. Directional signs complying with *Section 11B*-703.5 that indicate the location of the nearest entrance complying with *Section 11B*-404 shall be provided at entrances that do not comply with *Section 11B*-404. *Directional signs complying with Section 11B-703.5, including the International Symbol of Accessibility complying with Section 11B-703.7.2.1, indicating the accessible route to the nearest accessible entrance shall be provided at junctions when the accessible route diverges from the regular circulation path.*

Exceptions:

1. *An International Symbol of Accessibility is not required at entrances to individual rooms, suites, offices, sales or rental establishments, or other such spaces when all entrances to the building or facility are accessible and persons entering the building or facility have passed through one or more entrances with signage complying with this section.*

2. *An International Symbol of Accessibility is not required at entrances to machinery spaces frequented only by service personnel for maintenance, repair, or occasional monitoring of equipment; for example, elevator pits or elevator penthouses; mechanical, electrical or communications equipment rooms; piping or equipment catwalks; electric substations and transformer vaults; and highway and tunnel utility facilities.*

USDOJ

Advisory 11B-216.6 Entrances. Where a directional sign is required, it should be located to minimize backtracking. In some cases, this could mean locating a sign at the beginning of a route, not just at the inaccessible entrances to a building. ■

DSA

Advisory 11B-216.6 Entrances. Directional signs are needed where the accessible route diverges from the route for the general public and should be located at decision points (for example where the path to the stairs diverges from the path to an elevator or ramp). Directional signs are not needed where paths are equal and/or readily apparent. The signage program should be designed to consider differing uses of a facility which occur at different times of the day. For example, portions of a facility may be closed in the evening; appropriate signage should be provided to give adequate direction during these hours of use in addition to the typical operational hours.

The sign program should be designed to provide the appropriate level of signage at points necessary for convenient navigation around the site. Too many signs can be confusing to everyone utilizing the site. ■

***11B*-216.7 Elevators.** Where existing elevators do not comply with *Section 11B*-407, elevators complying with *Section 11B*-407 shall be clearly identified with the International Symbol of Accessibility complying with *Section 11B*-703.7.2.1. *Existing buildings that have been remodeled to provide specific elevators for public use that comply with these building standards shall have the location of and the directions to these*

elevators posted in the building lobby on a sign complying with Section 11B-703.5, including the International Symbol of Accessibility complying with Section 11B-703.7.2.1.

***11B*-216.8 Toilet rooms and bathing rooms.** *Entrances to toilet rooms and bathing rooms shall be identified by a geometric symbol complying with Section 11B-703.7.2.6.* Where existing toilet rooms or bathing rooms do not comply with *Section 11B*-603, directional signs indicating the location of the nearest toilet room or bathing room complying with *Section 11B*-603 within the facility shall be provided. Signs shall comply with *Section 11B*-703.5 and shall include the International Symbol of Accessibility complying with *Section 11B*-703.7.2.1. Where existing toilet rooms or bathing rooms do not comply with *Section 11B*-603, the toilet rooms or bathing rooms complying with *Section 11B*-603 shall be identified by the International Symbol of Accessibility complying with *Section 11B*-703.7.2.1. Where clustered single user toilet rooms or bathing facilities are permitted to use exceptions to *Section 11B*-213.2, toilet rooms or bathing facilities complying with *Section 11B*-603 shall be identified by the International Symbol of Accessibility complying with *Section 11B*-703.7.2.1 unless all toilet rooms and bathing facilities comply with *Section 11B*-603. *Existing buildings that have been remodeled to provide specific toilet rooms or bathing rooms for public use that comply with these building standards shall have the location of and the directions to these rooms posted in or near the building lobby or entrance on a sign complying with Section 11B-703.5, including the International Symbol of Accessibility complying with Section 11B-703.7.2.1.*

***11B*-216.9 TTYs.** Identification and directional signs for public TTYs shall be provided in accordance with *Section 11B*-216.9.

> ***11B*-216.9.1 Identification signs.** Public TTYs shall be identified by the International Symbol of TTY complying with *Section 11B*-703.7.2.2.
>
> ***11B*-216.9.2 Directional signs.** Directional signs indicating the location of the nearest public TTY shall be provided at all banks of public pay telephones not containing a public TTY. In addition, where signs provide direction to public pay telephones, they shall also provide direction to public TTYs. *If a facility has no banks of telephones, the directional signage shall be provided at the entrance or in a building directory.* Directional signs shall comply with *Section 11B*-703.5 and shall include the International Symbol of TTY complying with *Section 11B*-703.7.2.2.

***11B*-216.10 Assistive listening systems.** Each assembly area required by *Section 11B*-219 to provide assistive listening systems shall provide signs informing patrons of the availability of the assistive listening system. *The sign shall include wording that states "Assistive-Listening System Available" and shall be posted in a prominent place at or near the assembly area entrance.* Assistive listening signs shall comply with *Section 11B*-703.5 and shall include the International Symbol of Access for Hearing Loss complying with *Section 11B*-703.7.2.4.

> **DSA**
>
> **Advisory 11B-216.10 Assistive listening systems.** The term "prominent place" means a place that arriving persons would easily notice. It is helpful, though not required, to identify the location or person to contact for obtaining the system on the sign. Note that a tactile sign is not required by this section. ■

> **Exception:** Where ticket offices or windows are provided, signs shall not be required at each assembly area provided that signs are displayed at each ticket office or window informing patrons of the availability of assistive listening systems.

***11B*-216.11 Check-out aisles.** Where more than one check-out aisle is provided, check-out aisles complying with *Section 11B*-904.3 shall be identified by *a sign complying with Section 11B-904.3.4*. Where check-out aisles are identified by numbers, letters, or functions, signs identifying check-out aisles complying with *Section 11B*-904.3 shall be located in the same location as the check-out aisle identification.

Exception: Where all check-out aisles comply with *Section 11B*-904.3, signs complying with *Section 11B*-703.7.2.1 shall not be required.

***11B*-216.12 Amusement rides.** Signs identifying the type of access provided on amusement rides shall be provided at entries to queues and waiting lines. In addition, where accessible unload areas also serve as accessible load areas, signs indicating the location of the accessible load and unload areas shall be provided at entries to queues and waiting lines. *Signs shall comply with Section 11B-703.5 and shall include the International Symbol of Accessibility complying with Section 11B-703.7.2.1.*

USDOJ

Advisory 11B-216.12 Amusement rides. Amusement rides designed primarily for children, amusement rides that are controlled or operated by the rider, and amusement rides without seats, are not required to provide wheelchair spaces, transfer seats, or transfer systems, and need not meet the sign requirements in Section 11B-216.12. The load and unload areas of these rides must, however, be on an accessible route and must provide turning space. ■

11B-216.13 Cleaner Air Symbol.

11B-216.13.1 Use of Cleaner Air Symbol. *Use of the Cleaner Air Symbol is voluntary. Where publicly funded facilities or any facilities leased or rented by the State of California, not including concessionaires, comply with the conditions of use identified in Section 11B-216.13.3, a Cleaner Air Symbol complying with Section 11B-703.7.2.5 is permitted to be posted in compliance with Section 11B-216.3 to indicate rooms, facilities, and path of travels that are accessible to and usable by people who are adversely impacted by airborne chemicals or particulates and/or the use of electrical fixtures and/or devices.*

11B-216.13.2 Removal of Cleaner Air Symbol. *If the path of travel, room and/or facility identified by the Cleaner Air Symbol should temporarily or permanently cease to meet the minimum conditions of use identified in Section 11B-216.13.3, the Cleaner Air Symbol shall be removed and shall not be replaced until the minimum conditions are again met.*

11B-216.13.3 Conditions of use. *The Cleaner Air Symbol shall be permitted for use to identify a path of travel, and a room or a facility when the following is met:*

1. *Floor or wall coverings, floor or wall covering adhesives, carpets, formaldehyde-emitting particleboard cabinetry, cupboards or doors have not been installed or replaced in the previous 12 months.*

2. *Incandescent lighting provided in lieu of fluorescent or halogen lighting, and electrical systems and equipment shall be operable by or on behalf of the occupant or user of the room, facility or path of travel.*

3. *Heating, ventilation, air conditioning and their controls shall be operable by or on behalf of the occupant or user.*

4. *To maintain "cleaner air" designation only nonirritating, nontoxic products will be used in cleaning, maintenance, disinfection, pest management or for any minimal touch-ups that are essential for occupancy of the area. Deodorizers or Fragrance Emission Devices and Systems (FEDS) shall not be used in the designated area. Pest control practices for cleaner air areas shall include the use of bait stations using boric acid, sticky traps and silicon caulk for sealing cracks and crevices. Areas shall be routinely monitored for pest problems. Additional nontoxic treatment methods, such as temperature extremes for termites, may be employed in the event of more urgent problems. These pest control practices shall not be*

used 48 hours prior to placement of the sign, and the facility shall be ventilated with outside air for a minimum of 24 hours following use or application.

5. *Signage shall be posted requesting occupants or users not to smoke or wear perfumes, colognes or scented personal care products. Fragranced products shall not be used in the designated cleaner-air room, facility or path of travel.*

6. *A log shall be maintained on site, accessible to the public either in person or by telephone, e-mail, fax or other accessible means as requested. One or more individuals shall be designated to maintain the log. The log shall record any product or practice used in the cleaner air designated room, facility or path of travel, as well as scheduled activities, that may impact the cleaner air designation. The log shall also include the product label as well as the Material Safety Data Sheets (MSDS).*

11B-216.14 Variable message signs. *Where provided in transportation facilities, variable message signs conveying transportation-related information shall comply with Section 11B-703.8. Where provided in buildings that are designed as emergency shelters, variable message signs conveying emergency-related information shall comply with Section 11B-703.8.*

***11B*-217 Telephones**

***11B*-217.1 General.** Where coin-operated public pay telephones, coinless public pay telephones, public closed-circuit telephones, public courtesy phones, or other types of public telephones are provided, public telephones shall be provided in accordance with *Section 11B*-217 for each type of public telephone provided. For purposes of this section, a bank of telephones shall be considered to be two or more adjacent telephones.

USDOJ

Advisory 11B-217.1 General. These requirements apply to all types of public telephones including courtesy phones at airports and rail stations that provide a free direct connection to hotels, transportation services, and tourist attractions. ■

***11B*-217.2 Wheelchair accessible telephones.** Where public telephones are provided, wheelchair accessible telephones complying with *Section 11B*-704.2 shall be provided in accordance with Table *11B*-217.2.

Exception: Drive-up only public telephones shall not be required to comply with *Section 11B*-217.2.

Table *11B*-217.2 Wheelchair Accessible Telephones

Number of Telephones Provided on a Floor, Level, or Exterior Site	Minimum Number of Required Wheelchair Accessible Telephones
1 or more single units	*At least 50 percent of telephone units, but not less than* 1 per floor, level, and exterior site
1 bank	*At least 50 percent of telephone units per bank, but not less than* 1 per floor, level, and exterior site
2 or more banks	*At least 50 percent of telephone units per bank, but not less than* 1 per bank *At least 1 telephone per floor shall meet the requirements for a forward reach telephone.*

***11B*-217.3 Volume controls.** All public telephones shall have volume controls complying with *Section 11B*-704.3.

***11B*-217.4 TTYs.** TTYs complying with *Section 11B*-704.4 shall be provided in accordance with *Section 11B*-217.4.

USDOJ

Advisory 11B-217.4 TTYs. Separate requirements are provided based on the number of public pay telephones provided at a bank of telephones, within a floor, a building, or on a site. In some instances one TTY can be used to satisfy more than one of these requirements. For example, a TTY required for a bank can satisfy the requirements for a building. However, the requirement for at least one TTY on an exterior site cannot be met by installing a TTY in a bank inside a building. Consideration should be given to phone systems that can accommodate both digital and analog transmissions for compatibility with digital and analog TTYs. ■

***11B*-217.4.1 Bank requirement.** Where four or more public pay telephones are provided at a bank of telephones, at least one public TTY complying with *Section 11B*-704.4 shall be provided at that bank.

Exception: ***Reserved.***

***11B*-217.4.2 Floor requirement.** TTYs in public buildings shall be provided in accordance with *Section 11B*-217.4.2.1. TTYs in private buildings shall be provided in accordance with *Section 11B*-217.4.2.2.

***11B*-217.4.2.1 Public buildings.** Where at least one public pay telephone is provided on a floor of a public building, at least one public TTY shall be provided on that floor.

***11B*-217.4.2.2 Private buildings.** Where four or more public pay telephones are provided on a floor of a private building, at least one public TTY shall be provided on that floor.

***11B*-217.4.3 Building requirement.** TTYs in public buildings shall be provided in accordance with *Section 11B*-217.4.3.1. TTYs in private buildings shall be provided in accordance with *Section 11B*-217.4.3.2.

***11B*-217.4.3.1 Public buildings.** Where at least one public pay telephone is provided in a public building, at least one public TTY shall be provided in the building. Where at least one public pay telephone is provided in a public use area of a public building, at least one public TTY shall be provided in the public building in a public use area.

***11B*-217.4.3.2 Private buildings.** Where four or more public pay telephones are provided in a private building, at least one public TTY shall be provided in the building.

Exception: *In a stadium or arena, in a convention center, in a hotel with a convention center or in a covered mall, if an interior public pay telephone is provided at least one interior public text telephone shall be provided in the facility.*

***11B*-217.4.4 Exterior site requirement.** Where four or more public pay telephones are provided on an exterior site, at least one public TTY shall be provided on the site.

***11B*-217.4.5 Rest stops, emergency roadside stops, and service plazas.** Where at least one public pay telephone is provided at a public rest stop, emergency roadside stop, or service plaza, at least one public TTY shall be provided.

***11B*-217.4.6 Hospitals.** Where at least one public pay telephone is provided serving a hospital emergency room, hospital recovery room, or hospital waiting room, at least one public TTY shall be provided at each location.

***11B*-217.4.7 Transportation facilities.** In transportation facilities, in addition to the requirements of *Sections 11B*-217.4.1 through *11B*-217.4.4, where at least one public pay telephone serves a

particular entrance to a bus or rail facility, at least one public TTY shall be provided to serve that entrance. In airports, in addition to the requirements of *Sections 11B*-217.4.1 through *11B*-217.4.4, where four or more public pay telephones are located in a terminal outside the security areas, a concourse within the security areas, or a baggage claim area in a terminal, at least one public TTY shall be provided in each location.

***11B*-217.4.8 Detention and correctional facilities.** In detention and correctional facilities, where at least one pay telephone is provided in a secured area used only by detainees or inmates and security personnel, at least one TTY shall be provided in at least one secured area.

***11B*-217.5 Shelves for portable TTYs.** Where a bank of telephones in the interior of a building consists of three or more public pay telephones, at least one public pay telephone at the bank shall be provided with a shelf and an electrical outlet in accordance with *Section 11B*-704.5.

Exceptions:

1. Secured areas of detention and correctional facilities where shelves and outlets are prohibited for purposes of security or safety shall not be required to comply with *Section 11B*-217.5.

2. The shelf and electrical outlet shall not be required at a bank of telephones with a TTY.

***11B*-218 Transportation facilities**

***11B*-218.1 General.** Transportation facilities shall comply with *Section 11B*-218.

***11B*-218.2 New and altered fixed guideway stations.** New and altered stations in rapid rail, light rail, commuter rail, intercity rail, high speed rail, and other fixed guideway systems shall comply with *Sections 11B*-810.5 through *11B*-810.10.

***11B*-218.3 Key stations and existing intercity rail stations.** Key stations and existing intercity rail stations shall comply with *Sections 11B*-810.5 through *11B*-810.10.

***11B*-218.4 Bus shelters.** Where provided, bus shelters shall comply with *Section 11B*-810.3.

***11B*-218.5 Other transportation facilities.** In other transportation facilities, public address systems shall comply with *Section 11B*-810.7 and clocks shall comply with *Section 11B*-810.8.

***11B*-219 Assistive listening systems**

***11B*-219.1 General.** Assistive listening systems shall be provided in accordance with *Section 11B*-219 and shall comply with *Section 11B*-706.

***11B*-219.2 Required systems.** *An assistive listening system shall be provided in assembly areas, including conference and meeting rooms.*

Exception: *This section does not apply to systems used exclusively for paging, background music, or a combination of these two uses.*

***11B*-219.3 Receivers.** *The minimum number of receivers to be provided shall be equal to 4 percent of the total number of seats, but in no case less than two.* Twenty-five percent minimum of receivers provided, but no fewer than two, shall be hearing-aid compatible in accordance with *Section 11B*-706.3.

Exceptions:

1. Where a building contains more than one assembly area and the assembly areas required to provide assistive listening systems are under one management, the total number of required receivers shall be permitted to be calculated according to the total number of seats in the assembly areas in the building provided that all receivers are usable with all systems.

2. Where all seats in an assembly area are served by an induction loop assistive listening system, the minimum number of receivers required by *Section 11B*-219.3 to be hearing-aid compatible shall not be required to be provided.

11B-219.4 Location*. If the assistive-listening system provided is limited to specific areas or seats, then such areas or seats shall be within a 50-foot (15240 mm) viewing distance of the stage or playing area and shall have a complete view of the stage or playing area.*

DSA

Advisory 11B-219.4 Location. Sitting in close proximity to the performing area benefits persons with hearing impairments by allowing them to lip-read and better see the facial expressions of performers. ■

11B-219.5 Permanent and portable systems. *Permanently installed assistive-listening systems are required in areas if (1) they accommodate at least 50 persons or if they have audio-amplification systems, and (2) they have fixed seating. If portable assistive-listening systems are used for conference or meeting rooms, the system may serve more than one room. An adequate number of electrical outlets or other supplementary wiring necessary to support a portable assistive-listening system shall be provided.*

DSA

Advisory 11B-219.5 Permanent and portable systems. The California Building Code (CBC) requires permanently installed assistive listening systems in those assembly areas where audible communication is integral to the use of a space (movie theaters, concert and lecture halls, playhouses, meeting rooms, etc.); where fixed seating is provided and where there may be an audio-amplification system. For other assembly areas, such as those without fixed seating, the CBC requires either a permanently installed system or a portable system. If a portable system is provided an adequate number of electrical outlets or other supplementary wiring to support the system is required. While this provision does not necessarily require the addition of electrical outlets, consideration should be given to locating outlets to support dispersion of seating available for individuals using the assistive listening systems. ■

Assembly Areas
With Room Occupancy Under 50
(where audible communication is integral to the use of the space)

Audio-Amplification System Provided?	Fixed Seating Provided?	Required:
no	n/a	outlets or wiring
yes	no	outlets or wiring
yes	yes	permanent system

Assembly Areas
With Room Occupancy Over 50
(where audible communication is integral to the use of the space)

Fixed Seating Provided?	Required:
yes	permanent system
no	outlets or wiring

11B*-220 Automatic teller machines, fare machines *and point-of-sale devices

***11B*-220.1 *Automatic teller machines and fare machines*.** Where automatic teller machines or self-service fare vending, collection, or adjustment machines are provided *they shall comply with Section 11B-220.1.* Where bins are provided for envelopes, waste paper, or other purposes, at least one of each type shall comply with *Section 11B*-811.

USDOJ

Advisory 11B-220.1 General. If a bank provides both interior and exterior ATMs, each such installation is considered a separate location. Accessible ATMs, including those with speech and those that are within reach of people who use wheelchairs, must provide all the functions provided to customers at that location at all times. For example, it is unacceptable for the accessible ATM only to provide cash withdrawals while inaccessible ATMs also sell theater tickets. ■

11B-220.1.1 One automatic teller machine or fare machine. *Where one automatic teller machine or fare machine is provided at a location, it shall comply with Sections 11B-707.2 through 11B-707.8.*

11B-220.1.2 Two automatic teller machines or fare machines. *Where two automatic teller machines or fare machines are provided at a location, one shall comply with Sections 11B-707.2 through 11B-707.8 and one shall comply with Sections 11B-309, 11B-707.2, 11B-707.4, 11B-707.5, 11B-707.6, 11B-707.7.2 and 11B-707.8.*

11B-220.1.3 Three or more automatic teller machines or fare machines. *Where three or more automatic teller machines or fare machines are provided at a location, at least 50 percent shall comply with Sections 11B-707.2 through 11B-707.8 and the rest shall comply with Sections 11B-309, 11B-707.2, 11B-707.4, 11B-707.5, 11B-707.6, 11B-707.7.2 and 11B-707.8.*

11B-220.2 Point-of-sale devices. *Where point-of-sale devices are provided, all devices at each location shall comply with Sections 11B-309.4, 11B-707.3, and 11B-707.7.2. In addition, point-of-sale systems that include a video touch screen or any other non-tactile keypad shall comply with either Section 11B-707.9.1.1 or 11B-707.9.1.2. Where point-of-sale devices are provided at check stands and sales and service counters, they shall comply with Section 11B-707.9.1, and shall also comply with Sections 11B-707.2, 11B-707.3 and 11B-707.4.*

Exception: *Where a single point-of-sale device is installed for use with any type of motor fuel, it shall comply with Sections 11B-220.2 and 11B-309. Where more than one point-of-sale device is installed for use with a specific type of motor fuel, a minimum of two for that type shall comply with Sections 11B-220.2 and 11B-309. Types of motor fuel include, but are not limited to, gasoline, diesel, compressed natural gas, methanol, ethanol or electricity.*

***11B*-221 Assembly areas**

***11B*-221.1 General.** Assembly areas shall provide wheelchair spaces, companion seats, designated aisle seats *and semi-ambulant seats* complying with *Sections 11B*-221 and *11B*-802. In addition, lawn seating shall comply with *Section 11B*-221.5.

DSA

Advisory 11B-221.1 General. Several different types of accessible seating are required in an assembly seating area.

Wheelchair seating areas, integrated into the general seating plan, are required so that people using wheelchairs are not isolated from other spectators or their friends and family.

These seating areas must comply with Section 11B-221.2.

Companion seats are required next to each wheelchair seating location. The companion seat is a conventional seat that accommodates a friend or companion. These seats must comply with Section 11B-221.3.

Aisle seating is required to be provided in addition to the wheelchair seating areas. At least five percent of aisle seats (but not less than one) are required to either have no armrest on the aisle side or to have a removable or folding armrest on the aisle side. These seats accommodate people who have a mobility disability but who wish to use a seat that is not in a wheelchair seating location. These seats must comply with Section 11B-221.4.

Semi-ambulant seating is required in addition to the spaces provided for wheelchair users. At least one percent of all seats (but no fewer than two) are required to provide 24 inches clear leg room from the front edge of the seat to the nearest obstruction or to the back of the seat immediately in front. These seats accommodate people who have a mobility disability but who wish to use a seat that is not in a wheelchair seating location. These seats must comply with Section 11B-221.6. ■

***11B*-221.2 Wheelchair spaces.** Wheelchair spaces complying with *Section 11B*-221.2 shall be provided in assembly areas with fixed seating.

DSA

Advisory 11B-221.2 Wheelchair spaces. Additional information regarding wheelchair accessible seating in venues that sell tickets for assigned seats is available on the US Department of Justice website at http://www.ada.gov/ticketing_2010.htm. ■

***11B*-221.2.1 Number and location.** Wheelchair spaces shall be provided complying with *Section 11B*-221.2.1.

***11B*-221.2.1.1 General seating.** Wheelchair spaces complying with *Section 11B*-802.1 shall be provided in accordance with Table *11B*-221.2.1.1.

Table *11B*-221.2.1.1 Number of Wheelchair Spaces in Assembly Areas

Number of Seats	Minimum Number of Required Wheelchair Spaces
4 to 25	1
26 to 50	2
51 to 150	4
151 to 300	5
301 to 500	6
501 to 5000	6, plus 1 for each *100*, or fraction thereof, between 501 through 5000
5001 and over	*46*, plus 1 for each 200, or fraction thereof, over 5000

***11B*-221.2.1.2 Luxury boxes, club boxes, and suites in arenas, stadiums, and grandstands.** In each luxury box, club box, and suite within arenas, stadiums, and grandstands, wheelchair spaces complying with *Section 11B*-802.1 shall be provided in accordance with Table *11B*-221.2.1.1.

USDOJ

Advisory 11B-221.2.1.2 Luxury boxes, club boxes, and suites in arenas, stadiums, and grandstands. The number of wheelchair spaces required in luxury boxes, club boxes, and suites within an arena, stadium, or grandstand is to be calculated box by box and suite by suite. ■

***11B*-221.2.1.3 Other boxes.** In boxes other than those required to comply with *Section 11B*-221.2.1.2, the total number of wheelchair spaces required shall be determined in accordance with Table *11B*-221.2.1.1. Wheelchair spaces shall be located in not less than 20 percent of all boxes provided. Wheelchair spaces shall comply with *Section 11B*-802.1.

USDOJ

Advisory 11B-221.2.1.3 Other boxes. The provision for seating in "other boxes" includes box seating provided in facilities such as performing arts auditoria where tiered boxes are designed for spatial and acoustical purposes. The number of wheelchair spaces required in boxes covered by Section 11B-221.2.1.3 is calculated based on the total number of seats provided in these other boxes. The resulting number of wheelchair spaces must be located in no fewer than 20% of the boxes covered by this section. For example, a concert hall has 20 boxes, each of which contains 10 seats, totaling 200 seats. In this example, 5 wheelchair spaces would be required, and they must be placed in at least 4 of the boxes. Additionally, because the wheelchair spaces must also meet the dispersion requirements of Section 11B-221.2.3, the boxes containing these wheelchair spaces cannot all be located in one area unless an exception to the dispersion requirements applies. ■

***11B*-221.2.1.4 Team or player seating.** At least one wheelchair space complying with *Section 11B*-802.1 shall be provided in team or player seating areas serving areas of sport activity.

> **Exception:** Wheelchair spaces shall not be required in team or player seating areas serving bowling lanes not required to comply with *Section 11B*-206.2.11.

11B-221.2.1.5 Stadium-style movie theaters. *In stadium-style movie theaters, the total number of wheelchair spaces required shall be determined in accordance with Table 11B-221.2.1.1. The required wheelchair spaces shall be located on risers or cross-aisles in the stadium section that satisfy at least one of the following criteria:*

1. *Located within the rear 60 percent of the seats provided in the theater; or*
2. *Located within the area of the theater in which the vertical viewing angles (as measured to the top of the screen) are from the 40th to the 100th percentile of vertical viewing angles for all seats as ranked from the seats in the first row (1st percentile) to seats in the back row (100th percentile).*

11B-221.2.1.6 Specialty seating areas. *In assembly areas, wheelchair spaces shall be provided in each specialty seating area that provides spectators with distinct services or amenities that generally are not available to other spectators. The number of wheelchair spaces provided in specialty seating areas shall be included in, rather than be in addition to, the total number of wheelchair spaces required by Table 11B-221.2.1.1.*

> ***Exception:*** *In existing buildings and facilities, if it is not readily achievable for wheelchair spaces to be placed in each specialty seating area, those services or amenities shall be provided to individuals with disabilities, and their companions, at other designated accessible locations at no additional cost.*

***11B*-221.2.2 Integration.** Wheelchair spaces shall be an integral part of the seating plan.

USDOJ

Advisory 11B-221.2.2 Integration. The requirement that wheelchair spaces be an "integral part of the seating plan" means that wheelchair spaces must be placed within the footprint of the seating area. Wheelchair spaces cannot be segregated from seating areas. For example, it would be unacceptable to place only the wheelchair spaces, or only the wheelchair spaces and their associated companion seats, outside the seating areas defined by risers in an assembly area. ■

***11B*-221.2.3 Lines of sight and dispersion.** Wheelchair spaces shall provide lines of sight complying with *Section 11B*-802.2 and shall comply with *Section 11B*-221.2.3. In providing lines of sight, wheelchair spaces shall be dispersed. Wheelchair spaces shall provide spectators with choices of seating locations and viewing angles that are substantially equivalent to, or better than, the choices of seating locations and viewing angles available to all other spectators. When the number of wheelchair spaces required by *Section 11B*-221.2.1 has been met, further dispersion shall not be required. *In stadiums, arenas and grandstands, wheelchair spaces shall be dispersed to all levels that include seating served by an accessible route.*

Exception: Wheelchair spaces in team or player seating areas serving areas of sport activity shall not be required to comply with *Section 11B*-221.2.3.

USDOJ

Advisory 11B-221.2.3 Lines of sight and dispersion. Consistent with the overall intent of the ADA, individuals who use wheelchairs must be provided equal access so that their experience is substantially equivalent to that of other members of the audience. Thus, while individuals who use wheelchairs need not be provided with the best seats in the house, neither may they be relegated to the worst. ■

***11B*-221.2.3.1 Horizontal dispersion.** Wheelchair spaces shall be dispersed horizontally. *In assembly areas that have seating encircling, in whole or in part, a field of play or performance, wheelchair spaces shall be dispersed horizontally around the field of play or performance area.*

Exceptions:

1. Horizontal dispersion shall not be required in assembly areas with 300 or fewer seats if the companion seats required by *Section 11B*-221.3 and wheelchair spaces are located within the 2nd or 3rd quartile of the total row length. Intermediate aisles shall be included in determining the total row length. If the row length in the 2nd and 3rd quartile of a row is insufficient to accommodate the required number of companion seats and wheelchair spaces, the additional companion seats and wheelchair spaces shall be permitted to be located in the 1st and 4th quartile of the row.

2. In row seating, two wheelchair spaces shall be permitted to be located side-by-side.

USDOJ

Advisory 11B-221.2.3.1 Horizontal dispersion. Horizontal dispersion of wheelchair spaces is the placement of spaces in an assembly facility seating area from side-to-side or, in the case of an arena or stadium, around the field of play or performance area. ■

***11B*-221.2.3.2 Vertical dispersion.** Wheelchair spaces shall be dispersed vertically at varying distances from the screen, performance area, or playing field. In addition, wheelchair spaces shall be located in each balcony or mezzanine that is located on an accessible route.

Exceptions:

1. Vertical dispersion shall not be required in assembly areas with 300 or fewer seats if the wheelchair spaces provide viewing angles that are equivalent to, or better than, the average viewing angle provided in the facility.

2. In bleachers, wheelchair spaces shall not be required to be provided in rows other than rows at points of entry to bleacher seating.

USDOJ

Advisory 11B-221.2.3.2 Vertical dispersion. When wheelchair spaces are dispersed vertically in an assembly facility they are placed at different locations within the seating area from front-to-back so that the distance from the screen, stage, playing field, area of sports activity, or other focal point is varied among wheelchair spaces. ■

USDOJ

Advisory 11B-221.2.3.2 Vertical dispersion Exception 2. Points of entry to bleacher seating may include, but are not limited to, cross aisles, concourses, vomitories, and entrance ramps and stairs. Vertical, center, or side aisles adjoining bleacher seating that are stepped or tiered are not considered entry points. ■

DSA

Advisory 11B-221.2.3.2 Vertical dispersion Exception 2. Designing spectator seating for accessibility can be more complicated when folding bleachers are utilized. The lower rows of bleacher seats in a bank of bleachers often are omitted to allow for wheelchair positions with companion seating provided on the end of the adjacent row or on portable chairs. ■

11B-221.2.4 Temporary structures. *Wheelchair spaces shall not be located on, or be obstructed by, temporary platforms or other movable structures.*

Exception: *When an entire seating section is placed on temporary platforms or other movable structures in an area where fixed seating is not provided, in order to increase seating for an event, wheelchair spaces may be placed in that section.*

NOTE: *When required wheelchair spaces are not occupied by persons eligible for those spaces, individual, removable seats may be placed in those spaces.*

DSA

Advisory 11B-221.2.5 Removable chairs. Readily removable seats should be designed to facilitate easy, timely and frequent removal and installation. If mechanically fastened to the floor the release mechanisms need to be easily operated by untrained individuals without special tools or knowledge. Seats which have been removed need to be stored so as not to create obstructions. ■

***11B*-221.3 Companion seats.** At least one companion seat complying with *Section 11B*-802.3 shall be provided *immediately adjacent to* each wheelchair space required by *Section 11B*-221.2.1.

DSA

Advisory 11B-221.3 Companion seats. The following advisory language clarifies the operational requirements of 28 CFR Part 36, Section 36.302(f)(4)(i).

People purchasing a ticket for an accessible seat may purchase up to three additional seats for their companions in the same row and these seats must be contiguous with the accessible seat. If contiguous seats have already been sold and are not available, the venue must offer other seats as close as possible to the accessible seat. If those seats are in a different price category, the venue is not required to modify the price and may charge the same price as it charges others for those seats. When designing, best practice is to locate wheelchair spaces in rows where seating for a minimum of four is provided. Where two wheelchair spaces are provided adjacent to one another, one can be used as a companion seat.

Where a venue limits ticket sales to fewer than four tickets, those limits also apply to tickets for accessible seats. Similarly, when a venue allows the purchase of more than four tickets, that policy also applies to tickets for accessible seats, but only three companion seats must be contiguous with the accessible seat.

Many venues offer a group sales rate for groups of a pre-determined size. If a group includes one or more individuals who need accessible seating, the entire group should be seated together in an area that includes accessible seating. If it is not possible to seat the entire group together and the group must be split, the tickets should be allocated so that the individuals with disabilities are not isolated from others in their group.

Additional information regarding wheelchair accessible seating in venues that sell tickets for assigned seats is available on the US Department of Justice website at http://www.ada.gov/ticketing_2010.htm. ■

***11B*-221.4 Designated aisle seats.** At least 5 percent of the total number of aisle seats provided shall comply with *Section 11B*-802.4 and shall be the aisle seats located closest to accessible routes.

Exception: Team or player seating areas serving areas of sport activity shall not be required to comply with *Section 11B*-221.4.

USDOJ

Advisory 11B-221.4 Designated aisle seats. When selecting which aisle seats will meet the requirements of Section 11B-802.4, those aisle seats which are closest to, not necessarily on, accessible routes must be selected first. For example, an assembly area has two aisles (A and B) serving seating areas with an accessible route connecting to the top and bottom of Aisle A only. The aisle seats chosen to meet Section 11B-802.4 must be those at the top and bottom of Aisle A, working toward the middle. Only when all seats on Aisle A would not meet the five percent minimum would seats on Aisle B be designated. ■

***11B*-221.5 Lawn seating.** Lawn seating areas and exterior overflow seating areas, where fixed seats are not provided, shall connect to an accessible route.

11B-221.6 Semi-ambulant seats. *At least 1 percent of the total number of seats, and no fewer than two, shall be semi-ambulant seats complying with Section 11B-802.5.*

***11B*-222 Dressing, fitting, and locker rooms**

***11B*-222.1 General.** Where dressing rooms, fitting rooms, or locker rooms are provided, at least 5 percent, but no fewer than one, of each type of use in each cluster provided shall comply with *Section 11B*-803.

Advisory 11B-222.1 General. A "cluster" is a group of rooms proximate to one another. Generally, rooms in a cluster are within sight of, or adjacent to, one another. Different styles of design provide users varying levels of privacy and convenience. Some designs include private changing facilities that are close to core areas of the facility, while other designs use space more economically and provide only group dressing facilities. Regardless of the type of facility, dressing, fitting, and locker rooms should provide people with disabilities rooms that are equally private and convenient to those provided others. For example, in a physician's office, if people without disabilities must traverse the full length of the office suite in clothing other than their street clothes, it is acceptable for people with disabilities to be asked to do the same. ■

Exception: In alterations, where it is technically infeasible to provide rooms in accordance with *Section 11B*-222.1, one room for each sex on each level shall comply with *Section 11B*-803. Where only unisex rooms are provided, unisex rooms shall be permitted.

***11B*-222.2 Coat hooks and shelves.** Where coat hooks or shelves are provided in dressing, fitting or locker rooms without individual compartments, at least one of each type shall comply with *Section 11B*-803.5. Where coat hooks or shelves are provided in individual compartments at least one of each type complying with *Section 11B*-803.5 shall be provided in individual compartments in dressing, fitting, or locker rooms required to comply with *Section 11B*-222.1.

11B-222.3 Mirrors. *Where mirrors are provided in dressing, fitting or locker rooms without individual compartments, at least one of each type shall comply with Section 11B-803.6. Where mirrors are provided in individual compartments at least one of each type complying with Section 11B-803.6 shall be provided in individual compartments in dressing, fitting or locker rooms required to comply with Section 11B-222.1.*

***11B*-223 Medical care and long-term care facilities**

***11B*-223.1 General.** In licensed medical care facilities and licensed long-term care facilities where the period of stay exceeds twenty-four hours, patient *bedrooms* or resident sleeping rooms shall be provided in accordance with *Sections 11B*-223 *and 11B-805*.

Exception: Toilet rooms that are part of critical or intensive care patient sleeping rooms shall not be required to comply with *Section 11B*-603.

Advisory 11B-223.1 General. Because medical facilities frequently reconfigure spaces to reflect changes in medical specialties, Section 11B-223.1 does not include a provision for dispersion of accessible patient bedrooms or resident sleeping rooms. The lack of a design requirement does not mean that covered entities are not required to provide services to people with disabilities where accessible patient bedrooms or resident sleeping rooms are not dispersed in specialty areas. Locate accessible patient bedrooms or resident sleeping rooms near core areas that are less likely to change over time. While dispersion is not required, the flexibility it provides can be a critical factor in ensuring cost effective compliance with applicable civil rights laws, including titles II and III of the ADA and Section 504 of the Rehabilitation Act of 1973, as amended. Additionally, all types of features and amenities should be dispersed among accessible patient bedrooms or resident sleeping rooms to

ensure equal access to and a variety of choices for all patients and residents. ■

***11B*-223.1.1 Alterations.** Where *patient bedrooms or resident* sleeping rooms are altered or added, the requirements of *Section 11B*-223 shall apply only to the *patient bedrooms or resident* sleeping rooms being altered or added until the number of *patient bedrooms or resident* sleeping rooms complies with the minimum number required for new construction.

Advisory 11B-223.1.1 Alterations. In alterations and additions, the minimum required number is based on the total number of patient bedrooms or resident sleeping rooms altered or added instead of on the total number of patient bedrooms or resident sleeping rooms provided in a facility. As a facility is altered over time, every effort should be made to disperse accessible patient bedrooms or resident sleeping rooms among patient care areas such as pediatrics, cardiac care, maternity, and other units. In this way, people with disabilities can have access to the full-range of services provided by a medical care facility. ■

11B-223.1.1.1 Area alterations. *Patient bedrooms or resident sleeping rooms added or altered as part of a planned renovation of an entire wing, a department, or other discrete area of an existing medical facility shall comply with Section 11B-805.2 until the number of patient bedrooms or resident sleeping rooms provided within the area of renovation complies with the minimum number required for new construction by Section 11B-223.2 or 11B-223.3.*

11B-223.1.1.2 Individual alterations. *Patient bedrooms or resident sleeping rooms added or altered individually, and not as part of an alteration of an entire area, shall comply with Section 11B-805.2, until either: a) the number of patient bedrooms or resident sleeping rooms provided in the department or area containing the individually altered or added patient bedrooms or resident sleeping rooms complies with the minimum number required if the percentage requirements of Section 11B-223.2 or 11B-223.3 were applied to that department or area; or b) the overall number of patient bedrooms or resident sleeping rooms in the facility complies with the minimum number required for new construction by Section 11B-223.2 or 11B-223.3.*

11B-223.1.1.3 Toilet and bathing facilities. *Toilet/bathing rooms which are part of patient bedrooms added or altered and required to be accessible shall comply with Section 11B-805.2.4.*

***11B*-223.2 Hospitals, rehabilitation facilities, psychiatric facilities and detoxification facilities.** Hospitals, rehabilitation facilities, psychiatric facilities and detoxification facilities shall comply with *Section 11B*-223.2. *All public use and common use areas shall be accessible in compliance with this chapter.*

***11B*-223.2.1 Facilities not specializing in treating conditions that affect mobility.** In facilities not specializing in treating conditions that affect mobility, *including hospitals, psychiatric and detoxification facilities,* at least 10 percent, but no fewer than one, of the patient *bedrooms or resident* sleeping rooms shall provide mobility features complying with *Section 11B*-805. *Accessible patient bedrooms or resident sleeping rooms shall be dispersed in a manner that is proportionate by type of medical specialty.*

***11B*-223.2.2 Facilities specializing in treating conditions that affect mobility.** In facilities specializing in treating conditions that affect mobility, 100 percent of the patient *bedrooms* shall provide mobility features complying with *Section 11B*-805.

Advisory 11B-223.2.2 Facilities specializing in treating conditions that affect mobility. Conditions that affect mobility include conditions requiring the use or assistance of a brace, cane, crutch, prosthetic device, wheelchair, or powered mobility aid; arthritic, neurological, or

orthopedic conditions that severely limit one's ability to walk; respiratory diseases and other conditions which may require the use of portable oxygen; and cardiac conditions that impose significant functional limitations. Facilities that may provide treatment for, but that do not specialize in treatment of such conditions, such as general rehabilitation hospitals, are not subject to this requirement but are subject to Section 11B-223.2.1. ■

11B-223.2.3 On-call rooms. *Where physician or staff on-call sleeping rooms are provided, at least 10 percent, but no fewer than one, of the on-call rooms shall provide mobility features complying with Sections 11B-806.2.3, 11B-806.2.4 and 11B-806.2.6.*

***11B*-223.3 Long-term care facilities.** In licensed long-term care facilities, *including skilled nursing facilities, intermediate care facilities and nursing homes,* at least 50 percent, but no fewer than one, of each type of *patient bedroom or* resident sleeping room shall provide mobility features complying with *Section 11B*-805.

11B-223.4 Professional offices of health care providers. *Professional offices of health care providers shall comply with Section 11B-805.*

***11B*-224 Transient lodging guest rooms**

***11B*-224.1 General.** *Hotels, motels, inns, dormitories, resorts and similar transient* lodging facilities shall provide guest rooms in accordance with *Section 11B*-224.

USDOJ

Advisory 11B-224.1 General. Certain facilities used for transient lodging, including time shares, dormitories, and town homes may be covered by both these requirements and the Fair Housing Amendments Act. The Fair Housing Amendments Act requires that certain residential structures having four or more multi-family dwelling units, regardless of whether they are privately owned or federally assisted, include certain features of accessible and adaptable design according to guidelines established by the U.S. Department of Housing and Urban Development (HUD). This law and the appropriate regulations should be consulted before proceeding with the design and construction of residential housing. ■

***11B*-224.1.1 Alterations.** Where guest rooms are altered or added, the requirements of *Section 11B*-224 shall apply only to the guest rooms being altered or added until the number of guest rooms complies with the minimum number required for new construction.

USDOJ

Advisory 11B-224.1.1 Alterations. In alterations and additions, the minimum required number of accessible guest rooms is based on the total number of guest rooms altered or added instead of the total number of guest rooms provided in a facility. Typically, each alteration of a facility is limited to a particular portion of the facility. When accessible guest rooms are added as a result of subsequent alterations, compliance with Section 11B-224.5 (Dispersion) is more likely to be achieved if all of the accessible guest rooms are not provided in the same area of the facility. ■

***11B*-224.1.2 Guest room doors and doorways.** Entrances, doors, and doorways providing user passage into and within guest rooms that are not required to provide mobility features complying with *Section 11B*-806.2 shall comply with *Section 11B*-404.2.3. *Bathrooms doors shall be either sliding or hung to swing in the direction of egress from the bathroom.*

Exception: Shower and sauna doors in guest rooms that are not required to provide mobility features complying with *Section 11B*-806.2 shall not be required to comply with *Section 11B*-404.2.3.

USDOJ

Advisory 11B-224.1.2 Guest room doors and doorways. Because of the social interaction that often occurs in lodging facilities, an accessible clear opening width is required for doors and doorways to and within all guest rooms, including those not required to be accessible. This applies to all doors, including bathroom doors, that allow full user passage. Other requirements for doors and doorways in Section 11B-404 do not apply to guest rooms not required to provide mobility features. ■

11B-224.1.3 Range of accommodations. *Accessible guest rooms or suites shall be dispersed among the various classes of sleeping accommodations to provide a range of options applicable to room sizes, costs, and amenities provided.*

11B-224.1.4 Guest room toilet and bathing rooms. *Where toilet and bathing rooms are provided in guest rooms that are not required to provide mobility features complying with Section 11B-806.2, toilet and bathing fixtures shall only be required to comply with Section 11B-603.6.*

***11B*-224.2 Guest rooms with mobility features.** In transient lodging facilities, guest rooms with mobility features complying with *Section 11B*-806.2 shall be provided in accordance with Table *11B*-224.2, *as follows.*

11B-224.2.1 Fifty or less guest room facilities. *Facilities that are subject to the same permit application on a common site that each have 50 or fewer guest rooms may be combined for the purposes of determining the required number of accessible rooms and type of accessible bathing facility.*

11B-224.2.2 More than fifty guest room facilities. *Facilities with more than 50 guest rooms shall be treated separately for the purposes of determining the required number of accessible rooms and type of accessible bathing facility.*

Table *11B*-224.2 Guest Rooms with Mobility Features

Total Number of Guest Rooms Provided	Minimum Number of Required Rooms Without Roll-in Showers	Minimum Number of Required Rooms With Roll-in Showers	Total Number of Required Rooms
1 to 25	*0*	*1*	1
26 to 50	*1*	*1*	2
51 to 75	3	1	4
76 to 100	4	1	5
101 to 150	5	2	7
151 to 200	6	2	8
201 to 300	7	3	10
301 to 400	8	4	12
401 to 500	9	4	13
501 to 1000	2 percent of total	1 percent of total	3 percent of total
1001 and over	20, plus 1 for each 100, or fraction thereof, over 1000	10, plus 1 for each 100, or fraction thereof, over 1000	30, plus 2 for each 100, or fraction thereof, over 1000

DSA

Advisory 11B-224.2 Guest rooms with mobility features. In hotels, motels or other transient lodging facilities, Table 11B-224.2 indicates the required total number of mobility accessible rooms, including both rooms without roll-in showers and with roll-in showers. All of these rooms are required to comply with the technical requirements of Section 11B-806.2. Not more than 10 percent of guest rooms required to provide mobility features by Table 11B-224.2 may be used to satisfy the minimum number of guest rooms required to provide communication features by Table 11B-224.4.

For example, a new 275-room hotel must have a total of ten mobility accessible guest rooms; a minimum of three of the ten must have roll-in showers per Table 11B-224.2. In addition to those ten mobility accessible rooms, 17 guest rooms are required to provide communication features per Table 11B-224.4. Only 10 percent of the rooms required to provide mobility features, or one mobility accessible room, may also be used to satisfy the requirements of Table 11B-224.4. Sixteen additional communication accessible rooms must be provided. ■

***11B*-224.3 Beds.** In guest rooms having more than 25 beds, 5 percent minimum of the beds shall have clear floor space complying with *Section 11B*-806.2.3.

***11B*-224.4 Guest rooms with communication features.** In transient lodging facilities, guest rooms with communication features complying with *Section 11B*-806.3 shall be provided in accordance with Table *11B*-224.4.

Table *11B*-224.4 Guest Rooms with Communication Features

Total Number of Guest Rooms Provided	Minimum Number of Required Guest Rooms With Communication Features
1	1
2 to 25	2
26 to 50	4
51 to 75	7
76 to 100	9
101 to 150	12
151 to 200	14
201 to 300	17
301 to 400	20
401 to 500	22
501 to 1000	5 percent of total
1001 and over	50, plus 3 for each 100 over 1000

***11B*-224.5 Dispersion.** Guest rooms required to provide mobility features complying with *Section 11B*-806.2 and guest rooms required to provide communication features complying with *Section 11B*-806.3 shall be dispersed among the various classes of guest rooms, and shall provide choices of types of guest rooms, number of beds, and other amenities comparable to the choices provided to other guests. Where the minimum number of guest rooms required to comply with *Section 11B*-806 is not sufficient to allow for complete dispersion, guest rooms shall be dispersed in the following priority: guest room type, number of beds, and amenities. At least one guest room required to provide mobility features complying with *Section 11B*-806.2 shall also provide communication features complying with *Section 11B*-806.3. Not more than 10 percent of guest rooms required to provide mobility features complying with *Section 11B*-806.2 shall be used to satisfy the minimum number of guest rooms required to provide communication features complying with *Section 11B*-806.3.

USDOJ

Advisory 11B-224.5 Dispersion. Factors to be considered in providing an equivalent range of options may include, but are not limited to, room size, bed size, cost, view, bathroom fixtures such as hot tubs and spas, smoking and nonsmoking, and the number of rooms provided. ■

11B-224.6 Storage. *Fixed or built-in storage facilities within guest rooms required to provide mobility features shall comply with Section 11B-225.*

11B-224.7 Housing at a place of education.* *Housing at a place of education subject to this section shall comply with Sections 11B-224.1 through 11B-224.6 and 11B-806 for transient lodging guest rooms. For the purposes of the application of this section, the term "sleeping room" is interchangeable with "guest room" as used in the transient lodging standards.*

Exceptions:

1. *Kitchens within housing units containing accessible sleeping rooms with mobility features (including suites and clustered sleeping rooms) or on floors containing accessible sleeping rooms with mobility features shall provide turning spaces that comply with Section 11B-809.2.2 and kitchen work surfaces that comply with Section 11B-804.3.*

2. *Multi-bedroom housing units containing accessible sleeping rooms with mobility features shall have an accessible route throughout the unit in compliance with Section 11B-809.2.*

3. *Housing facilities units that are provided by or on behalf of a place of education, with residential dwelling units leased on a year round basis exclusively to graduate students or faculty, and that do not contain any public use or common use areas available for educational programming, are not subject to Sections 11B-224 and shall comply with Section 11B-233.*

11B-224.7.1 Multi-bedroom housing units with mobility features. *Multi-bedroom housing units containing accessible sleeping rooms with mobility features shall have an accessible route throughout the unit in compliance with Section 11B-809.2. Kitchens, when provided, within housing units containing accessible sleeping rooms with mobility features shall comply with Section 11B-804.*

11B-224.7.2 Multi-bedroom housing units with adaptable features. *Multi-bedroom housing units with adaptable features shall be provided as required by Section 11B-233.3.1.2. The number of required multi-bedroom housing units with adaptable features shall be reduced by the number of multi-bedroom housing units with mobility features required by Section 11B-224.2.*

11B-224.8 Social service center establishments. *Group homes, halfway houses, shelters, or similar social service center establishments that provide either temporary sleeping accommodations or residential dwelling units subject to this section shall comply with Sections 11B-224.1 through 11B-224.6 and Section 11B-233.3.*

---

* The inclusion in *Section 11B-224.7*, of *Exceptions 1, 2 and 3* is incorrect. The provisions in the exceptions were reorganized and rewritten as *Sections 11B-224.7.1 and 11B-224.7.2.* There is one exception under *Section 11B-*224.7 that reads - ***Exception*** *Housing facilities that are provided by or on behalf of a place of education, with residential dwelling units leased on a year round basis exclusively to graduate students or faculty, and that do not contain any public use or common use areas available for educational programming, are not subject to Section 11B-224 and shall comply with Section 11B-233.*

11B-224.8.1 More than twenty-five bed sleeping rooms. *In sleeping rooms with more than twenty-five beds, a minimum of 5 percent of the beds shall have clear floor space complying with Section 11B-806.2.3.*

11B-224.8.2 More than fifty bed facilities. *Facilities with more than fifty beds that provide common use bathing facilities, shall provide at least one roll-in shower with a seat that complies with Section 11B-608. When separate shower facilities are provided for men and women, at least one roll-in shower shall be provided for each group.*

***11B*-225 Storage**

***11B*-225.1 General.** Storage facilities shall comply with *Section 11B*-225.

***11B*-225.2 Storage.** Where storage is provided in accessible spaces, at least one of each type shall comply with *Section 11B*-811.

USDOJ

Advisory 11B-225.2 Storage. Types of storage include, but are not limited to, closets, cabinets, shelves, clothes rods, hooks, and drawers. Where provided, at least one of each type of storage must be within the reach ranges specified in Section 11B-308; however, it is permissible to install additional storage outside the reach ranges. ■

***11B*-225.2.1 Lockers.** Where lockers are provided, at least 5 percent, but no fewer than one of each type, shall comply with *Section 11B*-811.

USDOJ

Advisory 11B-225.2.1 Lockers. Different types of lockers may include full-size and half-size lockers, as well as those specifically designed for storage of various sports equipment. ■

***11B*-225.2.2 Self-service shelving.** Self-service shelves shall be located on an accessible route complying with *Section 11B*-402. Self-service shelving shall not be required to comply with *Section 11B*-308.

USDOJ

Advisory 11B-225.2.2 Self-service shelving. Self-service shelves include, but are not limited to, library, store, or post office shelves. ■

11B-225.2.3 Library book stacks. *Book stacks available for public use shall be 54 inches (1372 mm) maximum above the finish floor.*

Exceptions:

1. *Book stacks available for public use may be higher than 54 inches (1372 mm) maximum above the finish floor when an attendant is available to assist persons with disabilities.*

2. *Book stacks restricted to employee use are not required to comply with these requirements.*

***11B*-225.3 Self-service storage facilities.** Self-service storage facilities shall provide individual self-service storage spaces complying with these requirements in accordance with Table *11B*-225.3.

Table *11B*-225.3 Self-Service Storage Facilities

Total Spaces in Facility	Minimum Number of Spaces Required to be Accessible
1 to 200	5 percent, but no fewer than 1
201 and over	10, plus 2 percent of total number of units over 200

USDOJ

Advisory 11B-225.3 Self-service storage facilities. Although there are no technical requirements that are unique to self-service storage facilities, elements and spaces provided in facilities containing self-service storage spaces required to comply with these requirements must comply with this chapter where applicable. For example: the number of storage spaces required to comply with these requirements must provide Accessible Routes complying with Section 11B-206; Accessible Means of Egress complying with Section 11B-207; Parking Spaces complying with Section 11B-208; and, where provided, other public use or common use elements and facilities such as toilet rooms, drinking fountains, and telephones must comply with the applicable requirements of this chapter. ■

***11B*-225.3.1 Dispersion.** Individual self-service storage spaces shall be dispersed throughout the various classes of spaces provided. Where more classes of spaces are provided than the number required to be accessible, the number of spaces shall not be required to exceed that required by Table *11B*-225.3. Self-service storage spaces complying with Table *11B*-225.3 shall not be required to be dispersed among buildings in a multi-building facility.

***11B*-226 Dining surfaces and work surfaces**

***11B*-226.1 General.** Where dining surfaces are provided for the consumption of food or drink, at least 5 percent of the seating spaces and standing spaces at the dining surfaces shall comply with *Section 11B*-902. In addition, where work surfaces are provided for use by other than employees, at least 5 percent shall comply with *Section 11B*-902.

Exceptions:

1. Sales counters and service counters shall not be required to comply with *Section 11B*-902. *See Section 11B-227.*

2. Check writing surfaces provided at check-out aisles not required to comply with *Section 11B*-904.3 shall not be required to comply with *Section 11B*-902.

USDOJ

Advisory 11B-226.1 General. In facilities covered by the ADA, this requirement does not apply to work surfaces used only by employees. However, the ADA and, where applicable, Section 504 of the Rehabilitation Act of 1973, as amended, provide that employees are entitled to "reasonable accommodations." With respect to work surfaces, this means that employers may need to procure or adjust work stations such as desks, laboratory and work benches, fume hoods, reception counters, teller windows, study carrels, commercial kitchen counters, and conference tables to accommodate the individual needs of employees with

disabilities on an "as needed" basis. Consider work surfaces that are flexible and permit installation at variable heights and clearances. ■

***11B*-226.2 Dispersion.** Dining surfaces required to comply with *Section 11B*-902 shall be dispersed throughout the space or facility containing dining surfaces *for each type of seating in a functional area. Work surfaces required to comply with Section 11B-902 shall be dispersed throughout the space or facility containing work surfaces.*

***11B-226.3 Dining surfaces exceeding 34 inches in height.** Where food or drink is served for consumption at a counter exceeding 34 inches (864 mm) in height, a portion of the main counter 60 inches (1525 mm) minimum in length shall be provided in compliance with Section 11B-902.3.*

***11B-226.4 Baby changing tables.** Baby changing tables shall comply with Sections 11B-309 and 11B-902. Baby changing tables when deployed shall not obstruct the required width of an accessible route except as allowed by Section 11B-307.2. Baby changing tables shall not be located in toilet compartments complying with Section 11B-604.8 within a multiple accommodation toilet facility.*

***11B*-227 Sales and service**

***11B*-227.1 General.** Where provided, check-out aisles, sales counters, service counters, food service lines, queues, and waiting lines shall comply with *Sections 11B*-227 and *11B*-904.

***11B*-227.2 Check-out aisles.** Where check-out aisles are provided, check-out aisles complying with *Section 11B*-904.3 shall be provided in accordance with Table *11B*-227.2. Where check-out aisles serve different functions, check-out aisles complying with *Section 11B*-904.3 shall be provided in accordance with Table *11B*-227.2 for each function. Where check-out aisles are dispersed throughout the building or facility, check-out aisles complying with *Section 11B*-904.3 shall be dispersed. *When not all check-out aisles are accessible, accessible check-out aisles shall be identified by a sign complying with Section 11B-904.3.4.*

***NOTE:** Operational procedures are often necessary to ensure the Americans with Disabilities Act accessibility requirements are met. When check-out aisles are open for customer use, the business should ensure that a minimum of one accessible check-out aisle is always available for use by persons with disabilities. As check-out aisles are opened and closed based on fluctuating customer levels, the business should ensure that the number of accessible check-out aisles available complies with Table 11B-227.2.*

Exception: *In existing buildings, where* the selling space is under 5000 square feet (465 m^2) no more than one check-out aisle complying with *Section 11B*-904.3 shall be required.

Table *11B*-227.2 Check-Out Aisles

Number of Check-Out Aisles of Each Function	Minimum Number of Check-Out Aisles of Each Function Required to Comply with *11B*-904.3
1 to 4	1
5 to 8	2
9 to 15	3
16 and over	3, plus 20 percent of additional aisles

DSA

Advisory 11B-227.2 Check-out aisles. Where check-out aisles are provide, accessible check-out aisles are required. This section provides requirements specific to check-out aisle design and construction. In addition to the requirements of this section, operational procedures are often necessary to ensure the Americans with Disabilities Act accessibility

requirements are met. When check-out aisles are open for customer use, business owners should ensure that a minimum of one accessible check-out aisle is always available for use by persons with disabilities. As check-out aisles are opened and closed based on fluctuating customer levels, business owners should ensure that the number of accessible check-out aisles available complies with Table 11B-227.2. ■

***11B*-227.2.1 Altered check-out aisles.** Where check-out aisles are altered, at least one of each check-out aisle serving each function shall comply with *Section 11B*-904.3 until the number of check-out aisles complies with *Section 11B*-227.2.

***11B*-227.3 Counters.** Where provided, at least one of each type of sales counter and service counter shall comply with *Section 11B*-904.4. Where counters are dispersed throughout the building or facility, counters complying with *Section 11B*-904.4 also shall be dispersed.

USDOJ

Advisory 11B-227.3 Counters. Types of counters that provide different services in the same facility include, but are not limited to, order, pick-up, express, and returns. One continuous counter can be used to provide different types of service. For example, order and pick-up are different services. It would not be acceptable to provide access only to the part of the counter where orders are taken when orders are picked-up at a different location on the same counter. Both the order and pick-up section of the counter must be accessible. ■

***11B*-227.4 Food service lines.** Food service lines shall comply with *Section 11B*-904.5. Where self-service shelves are provided, at least 50 percent, but no fewer than one, of each type provided shall comply with *Section 11B*-308.

***11B*-227.5 Queues and waiting lines.** Queues and waiting lines servicing counters or check-out aisles required to comply with *Section 11B*-904.3 or *11B*-904.4 shall comply with *Section 11B*-403.

***11B*-228 Depositories, vending machines, change machines, mail boxes, and fuel dispensers**

***11B*-228.1 General.** Where provided, at least one of each type of depository, vending machine, change machine, and fuel dispenser shall comply with *Section 11B*-309.

Exception: Drive-up only depositories shall not be required to comply with *Section 11B*-309.

USDOJ

Advisory 11B-228.1 General. Depositories include, but are not limited to, night receptacles in banks, post offices, video stores, and libraries. ■

***11B*-228.2 Mail boxes.** Where mail boxes are provided in an interior location, at least 5 percent, but no fewer than one, of each type shall comply with *Section 11B*-309. In residential facilities, where mail boxes are provided for each residential dwelling unit, mail boxes complying with *Section 11B*-309 shall be provided for each residential dwelling unit required to provide mobility features complying with *Sections 11B*-809.2 through *11B*-809.4 *and adaptable features complying with Chapter 11A, Division IV*.

***11B*-229 Windows**

***11B*-229.1 General.** Where glazed openings are provided in accessible rooms or spaces for operation by occupants, at least one opening shall comply with *Section 11B*-309. Each glazed opening required by an administrative authority to be operable shall comply with *Section 11B*-309.

Exception:

1. Glazed openings in residential dwelling units required to comply with *Section 11B*-809 shall not be required to comply with *Section 11B*-229.

2. Glazed openings in guest rooms required to provide communication features and in guest rooms required to comply with *Section 11B*-206.5.3 shall not be required to comply with *Section 11B*-229.

***11B*-230 Two-way communication systems**

***11B*-230.1 General.** Where a two-way communication system is provided to gain admittance to a building or facility or to restricted areas within a building or facility, the system shall comply with *Section 11B*-708.

USDOJ

Advisory 11B-230.1 General. This requirement applies to facilities such as office buildings, courthouses, and other facilities where admittance to the building or restricted spaces is dependent on two-way communication systems. ■

***11B*-231 Judicial facilities**

***11B*-231.1 General.** Judicial facilities shall comply with *Section 11B*-231.

***11B*-231.2 Courtrooms.** Each courtroom shall comply with *Section 11B*-808.

***11B*-231.3 Holding cells.** Where provided, central holding cells and court-floor holding cells shall comply with *Section 11B*-231.3.

***11B*-231.3.1 Central holding cells.** Where separate central holding cells are provided for adult male, juvenile male, adult female, or juvenile female, one of each type shall comply with *Section 11B*-807.2. Where central holding cells are provided and are not separated by age or sex, at least one cell complying with *Section 11B*-807.2 shall be provided.

***11B*-231.3.2 Court-floor holding cells.** Where separate court-floor holding cells are provided for adult male, juvenile male, adult female, or juvenile female, each courtroom shall be served by one cell of each type complying with *Section 11B*-807.2. Where court-floor holding cells are provided and are not separated by age or sex, courtrooms shall be served by at least one cell complying with *Section 11B*-807.2. Cells may serve more than one courtroom.

***11B*-231.4 Visiting areas.** Visiting areas shall comply with *Section 11B*-231.4.

***11B*-231.4.1 Cubicles and counters.** At least 5 percent, but no fewer than one, of cubicles shall comply with *Section 11B*-902 on both the visitor and detainee sides. Where counters are provided, at least one shall comply with *Section 11B*-904.4.2 on both the visitor and detainee sides.

Exception: The detainee side of cubicles or counters at non-contact visiting areas not serving holding cells required to comply with *Section 11B*-231 shall not be required to comply with *Section 11B*-902 or *11B*-904.4.2.

***11B*-231.4.2 Partitions.** Where solid partitions or security glazing separate visitors from detainees at least one of each type of cubicle or counter partition shall comply with *Section 11B*-904.6.

***11B*-232 Detention facilities and correctional facilities**

***11B*-232.1 General.** Buildings, facilities, or portions thereof, in which people are detained for penal or correction purposes, or in which the liberty of the inmates is restricted for security reasons shall comply with *Section 11B*-232.

USDOJ

Advisory 11B-232.1 General. Detention facilities include, but are not limited to, jails, detention centers, and holding cells in police stations. Correctional facilities include, but are not limited to, prisons, reformatories, and correctional centers. ■

***11B*-232.2 General holding cells and general housing cells.** General holding cells and general housing cells shall be provided in accordance with *Section 11B*-232.2.

Exception: ***Reserved.***

USDOJ

Advisory 11B-232.2 General holding cells and general housing cells. Accessible cells or rooms should be dispersed among different levels of security, housing categories, and holding classifications (e.g., male/female and adult/juvenile) to facilitate access. Many detention and correctional facilities are designed so that certain areas (e.g., "shift" areas) can be adapted to serve as different types of housing according to need. For example, a shift area serving as a medium-security housing unit might be redesignated for a period of time as a high-security housing unit to meet capacity needs. Placement of accessible cells or rooms in shift areas may allow additional flexibility in meeting requirements for dispersion of accessible cells or rooms. ■

***11B*-232.2.1 Cells with mobility features.** At least *3 percent*, but no fewer than one, of the total number of cells in a facility shall provide mobility features complying with *Section 11B*-807.2.

***11B*-232.2.1.1 Beds.** In cells having more than 25 beds, at least 5 percent of the beds shall have clear floor space complying with *Section 11B*-807.2.3.

11B-232.2.1.2 Dispersion. *Cells with mobility features shall be provided in each classification level.*

11B-232.2.1.3 Substitute cells. *When alterations are made to specific cells, detention and correctional facility operators may satisfy their obligation to provide the required number of cells with mobility features by providing the required mobility features in substitute cells (cells other than those where alterations are originally planned), provided that each substitute cell meets the following conditions:*

1. *Located within the same prison site.*
2. *Integrated with the other cells to the maximum extent feasible.*
3. *Has equal physical access as the altered cells to areas used by inmates or detainees for visitation, dining, recreation, educational programs, medical services, work programs, religious services, and participation in other programs that the facility offers to inmates or detainees.*

11B-232.2.1.4 Technically infeasible*. Where it is technically infeasible to locate a substitute cell within the same prison site in compliance with Section 11B-232.2.1.3, a substitute cell shall be provided at another prison site within the correctional system.*

***11B*-232.2.2 Cells with communication features.** At least 2 percent, but no fewer than one, of the total number of general holding cells and general housing cells equipped with audible emergency alarm systems and permanently installed telephones within the cell shall provide communication features complying with *Section 11B*-807.3.

***11B*-232.3 Special holding cells and special housing cells.** Where special holding cells or special housing cells are provided, at least one cell serving each purpose shall provide mobility features complying with *Section 11B*-807.2. Cells subject to this requirement include, but are not limited to, those used for purposes of orientation, protective custody, administrative or disciplinary detention or segregation, detoxification, and medical isolation.

Exception: ***Reserved.***

***11B*-232.4 Medical care facilities.** Patient bedrooms or cells required to comply with *Section 11B*-223 shall be provided in addition to any medical isolation cells required to comply with *Section 11B*-232.3.

***11B*-232.5 Visiting areas.** Visiting areas shall comply with *Section 11B*-232.5.

***11B*-232.5.1 Cubicles and counters.** At least 5 percent, but no fewer than one, of cubicles shall comply with *Section 11B*-902 on both the visitor and detainee sides. Where counters are provided, at least one shall comply with *Section 11B*-904.4.2 on both the visitor and detainee or inmate sides.

Exception: The inmate or detainee side of cubicles or counters at non-contact visiting areas not serving holding cells or housing cells required to comply with *Section 11B*-232 shall not be required to comply with *Section 11B*-902 or *11B*-904.4.2.

***11B*-232.5.2 Partitions.** Where solid partitions or security glazing separate visitors from detainees or inmates at least one of each type of cubicle or counter partition shall comply with *Section 11B*-904.6.

***11B*-233 Residential facilities**

***11B*-233.1 General.** *Public housing facilities* with residential dwelling units *available for public use* with shall comply with *Section 11B*-233. *See Chapter 2, Section 202 of this code for the definition of Public Housing.*

DSA

Advisory 11B-233.1 General. This section addresses long-term living (non-transient), public housing dwelling units.

In public housing projects, the accessibility requirements of Chapter 11B are triggered when there are one or more units. In contrast, in privately funded housing projects, the accessibility requirements of Chapter 11A are triggered when there are three or more apartments or four or more condominiums within a single building. ■

USDOJ

Advisory 11B-233.1 General. Section 11B-233 outlines the requirements for residential facilities subject to the Americans with Disabilities Act of 1990. The facilities covered by Section 11B-233, as well as other facilities not covered by this section, may still be subject to other Federal laws such as the Fair Housing Act and Section 504 of the Rehabilitation Act of 1973, as amended. For example, the Fair Housing Act requires that certain residential structures having four or more multi-family dwelling units, regardless of whether they are privately owned or federally assisted, include certain features of accessible and adaptable design according to guidelines established by the U.S. Department of Housing and Urban

Development (HUD). These laws and the appropriate regulations should be consulted before proceeding with the design and construction of residential facilities.

Residential facilities containing residential dwelling units provided by entities subject to HUD's Section 504 regulations and residential dwelling units covered by Section 11B-233.3 must comply with the technical and scoping requirements in Divisions 1 through 10 included this chapter. Section 11B-233 is not a stand-alone section; this section only addresses the minimum number of residential dwelling units within a facility required to comply with Division 8. However, residential facilities must also comply with the requirements of this chapter. For example: Section 11B-206.5.4 requires all doors and doorways providing user passage in residential dwelling units providing mobility features to comply with Section 11B-404; Section 11B-206.7.6 permits platform lifts to be used to connect levels within residential dwelling units providing mobility features; Section 11B-208 provides general scoping for accessible parking and Section 11B-208.2.3.1 specifies the required number of accessible parking spaces for each residential dwelling unit providing mobility features; Section 11B-228.2 requires mail boxes to be within reach ranges when they serve residential dwelling units providing mobility features; play areas are addressed in Section 11B-240; and swimming pools are addressed in Section 11B-242. There are special provisions applicable to facilities containing residential dwelling units at: Exception 3 to 11B-202.3; Exception 1 to 11B-202.4; 11B-203.8; and Exception 4 to 11B-206.2.3. ■

11B*-233.2 *Reserved.

USDOJ

Advisory 11B-233.2 Residential dwelling units provided by entities subject to HUD Section 504 Regulations. Section 11B-233.2 requires that entities subject to HUD's regulations implementing Section 504 of the Rehabilitation Act of 1973, as amended, provide residential dwelling units containing mobility features and residential dwelling units containing communication features complying with these regulations in a number specified in HUD's Section 504 regulations. Further, the residential dwelling units provided must be dispersed according to HUD's Section 504 criteria. In addition, Section 11B-233.2 defers to HUD the specification of criteria by which the technical requirements of this chapter will apply to alterations of existing facilities subject to HUD's Section 504 regulations. ■

11B*-233.3 *Public housing facilities. *Public housing facilities* with residential dwelling units shall comply with *Section 11B*-233.3.

***11B*-233.3.1 Minimum number: new construction.** Newly constructed *public housing* facilities with residential dwelling units shall comply with *Section 11B*-233.3.1.

Exception: Where facilities contain 15 or fewer residential dwelling units, the requirements of *Sections 11B*-233.3.1.1 and *11B-233.3.1.3* shall apply to the total number of residential dwelling units that are constructed under a single contract, or are developed as a whole, whether or not located on a common site.

***11B*-233.3.1.1 Residential dwelling units with mobility features.** In *public housing* facilities with residential dwelling units, at least 5 percent, but no fewer than one unit, of the total number of residential dwelling units shall provide mobility features complying with *Sections 11B*-809.2 through *11B*-809.4 and shall be on an accessible route as required by *Section 11B*-206.

11B-233.3.1.2 Residential dwelling units with adaptable features. *In public housing facilities with residential dwelling units, adaptable residential dwelling units complying with Chapter 11A, Division IV – Dwelling Unit Features shall be provided as required by Sections 11B-233.3.1.2.1*

through 11B-233.3.1.2.5. Adaptable residential dwelling units shall be on an accessible route as required by Section 11B-206.

Exception: *The number of required adaptable residential dwelling units shall be reduced by the number of units required by Section 11B-233.3.1.1.*

11B-233.3.1.2.1 Elevator buildings. *Residential dwelling units on floors served by an elevator shall be adaptable.*

11B-233.3.1.2.2 Non-elevator buildings. *Ground floor residential dwelling units in non-elevator buildings shall be adaptable.*

11B-233.3.1.2.3 Ground floors above grade. *Where the first floor in a building containing residential dwelling units is a floor above grade, all units on that floor shall be adaptable.*

11B-233.3.1.2.4. Multi-story residential dwelling units. *In elevator buildings, public housing facilities with multi-story residential dwelling units shall comply with the following:*

Exception: *In non-elevator buildings, a minimum of 10 percent but not less than one of the ground floor multi-story residential dwelling units shall comply with Section 11B-233.3.1.2.4, calculated using the total number of multi-story residential dwelling units in buildings on a site.*

1. *The primary entry of the multi-story residential dwelling unit shall be on an accessible route. In buildings with elevators the primary entry shall be on the floor served by the elevator.*

2. *At least one powder room or bathroom shall be located on the primary entry level.*

3. *Rooms or spaces located on the primary entry level shall be served by an accessible route and comply with Chapter 11A, Division IV – Dwelling Unit Features.*

11B-233.3.1.2.5 Public housing facility site impracticality. *The number of adaptable residential dwelling units required in non-elevator building public housing facilities shall be determined in accordance with Chapter 11A, Section 1150A.1. The remaining ground floor residential dwelling units shall comply with the following requirements:*

1. *Grab bar reinforcement complying with Section 11B-609.*

2. *Doors complying with Section 11B-404.*

3. *Communication features complying with Section 11B-809.5.5.*

4. *Electrical receptacle and switches complying with Section 11B-308.1.*

5. *Toilet and bathing facilities complying with Section 11B-809.4.*

6. *Kitchen sink removable cabinets complying with Section 11B-606.2, Exception 3.*

11B-233.3.1.3 **Residential dwelling units with communication features.** In *public housing* facilities with residential dwelling units, at least 2 percent, but no fewer than one unit, of the total number of residential dwelling units shall provide communication features complying with *Section 11B*-809.5.

***11B*-233.3.2 Residential dwelling units for sale.** Residential dwelling units *designed and constructed or altered by public entities that will be* offered for sale *to individuals* shall provide accessible features to the extent required by *this chapter.*

Exception: *Existing residential dwellings or residential dwelling units acquired by public entities that will be offered for resale to individuals without additions or alterations shall not be required to comply with this chapter.*

USDOJ

Advisory 11B-233.3.2 Residential dwelling units for sale. A public entity that conducts a program to build housing for purchase by individual home buyers must provide access according to the requirements of this chapter and the ADA regulations and a program receiving Federal financial assistance must comply with the applicable Section 504 regulation. ■

***11B*-233.3.3 Additions.** Where an addition to an existing *public housing facility* results in an increase in the number of residential dwelling units, the requirements of *Section 11B*-233.3.1 shall apply only to the residential dwelling units that are added until the total number of residential dwelling units complies with the minimum number required by *Section 11B*-233.3.1. Residential dwelling units required to comply with *Sections 11B*-233.3.1.1 *and 11B-233.3.1.2* shall be on an accessible route as required by *Section 11B*-206.

***11B*-233.3.4 Alterations.** Alterations *to a public housing facility* shall comply with *Section 11B*-233.3.4.

Exception: Where compliance with *Section 11B*-809.2, *11B*-809.3, or *11B*-809.4 is technically infeasible, or where it is technically infeasible to provide an accessible route to a residential dwelling unit, the entity shall be permitted to alter or construct a comparable residential dwelling unit to comply with *Sections 11B*-809.2 through *11B*-809.4 provided that the minimum number of residential dwelling units required by *Sections 11B*-233.3.1.1*, 11B*-233.3.1.2 *and 11B-233.3.1.3*, as applicable, is satisfied.

USDOJ

Advisory 11B-233.3.4 Alterations Exception. A substituted dwelling unit must be comparable to the dwelling unit that is not made accessible. Factors to be considered in comparing one dwelling unit to another should include the number of bedrooms; amenities provided within the dwelling unit; types of common spaces provided within the facility; and location with respect to community resources and services, such as public transportation and civic, recreational, and mercantile facilities. ■

***11B*-233.3.4.1 Alterations to vacated buildings.** Where a building is vacated for the purposes of alteration *for use as public housing*, and the altered building contains more than 15 residential dwelling units, at least 5 percent of the residential dwelling units shall comply with *Sections 11B*-809.2 through *11B*-809.4 and shall be on an accessible route as required by *Section 11B*-206. *Residential dwelling units with adaptable features shall be provided in compliance with Section 11B-233.3.1.2.* In addition, at least 2 percent of the residential dwelling units shall comply with *Section 11B*-809.5.

Exception: *Where any portion of a building's exterior is preserved, but the interior of the building is removed, including all structural portions of floors and ceilings and a new building intended for use as public housing is constructed behind the existing exterior, the building is considered a new building for determining the application of this chapter.*

USDOJ

Advisory 11B-233.3.4.1 Alterations to vacated buildings. This provision is intended to apply where a building is vacated with the intent to alter the building. Buildings that are

vacated solely for pest control or asbestos removal are not subject to the requirements to provide residential dwelling units with mobility features or communication features. ■

***11B*-233.3.4.2 Alterations to individual residential dwelling units.** In *public housing facilities with* individual residential dwelling units, where a bathroom or a kitchen is substantially altered, and at least one other room is altered, the requirements of *Section 11B*-233.3.1 shall apply to the altered residential dwelling units until the total number of residential dwelling units complies with the minimum number required by *Sections 11B*-233.3.1.1*, 11B*-233.3.1.2, and *11B-233.3.1.3.* Residential dwelling units required to comply with *Sections 11B*-233.3.1.1 *and 11B-233.3.1.2* shall be on an accessible route as required by *Section 11B*-206.

Exception: Where *public housing* facilities contain 15 or fewer residential dwelling units, the requirements of *Sections 11B*-233.3.1.1, *11B*-233.3.1.2, *and 11B-233.3.1.3.* shall apply to the total number of residential dwelling units that are altered under a single contract, or are developed as a whole, whether or not located on a common site.

USDOJ

Advisory 11B-233.3.4.2 Alterations to individual residential dwelling units. Section 11B-233.3.4.2 uses the terms "substantially altered" and "altered." A substantial alteration to a kitchen or bathroom includes, but is not limited to, alterations that are changes to or rearrangements in the plan configuration, or replacement of cabinetry. Substantial alterations do not include normal maintenance or appliance and fixture replacement, unless such maintenance or replacement requires changes to or rearrangements in the plan configuration, or replacement of cabinetry. The term "alteration" is defined in Chapter 2, Section 202. ■

***11B*-233.3.5 Dispersion.** *In public housing facilities, residential* dwelling units required to provide mobility features complying with *Sections 11B*-809.2 through *11B*-809.4 and residential dwelling units required to provide communication features complying with *Section 11B*-809.5, *and adaptable features complying with Chapter 11A, Division IV* shall be dispersed among the various types of residential dwelling units in the facility and shall provide choices of residential dwelling units comparable to, and integrated with, those available to other residents.

Exception: *In public housing facilities where* multi-story residential dwelling units are one of the types of residential dwelling units provided, one-story residential dwelling units shall be permitted as a substitute for multi-story residential dwelling units where equivalent spaces and amenities are provided in the one-story residential dwelling unit.

11B-233.3.6 Graduate student and faculty housing at a place of education. *Housing facilities that are provided by or on behalf of a place of education, with residential dwelling units leased on a year round basis exclusively to graduate students or faculty, and that do not contain any public use or common use areas available for educational programming, are not subject to Section 11B-224 and shall comply with Section 11B-233.*

***11B*-234 Amusement rides**

***11B*-234.1 General.** Amusement rides shall comply with *Section 11B*-234.

Exception: Mobile or portable amusement rides shall not be required to comply with *Section 11B*-234.

USDOJ

Advisory 11B-234.1 General. These requirements apply generally to newly designed and constructed amusement rides and attractions. A custom designed and constructed ride is

new upon its first use, which is the first time amusement park patrons take the ride. With respect to amusement rides purchased from other entities, new refers to the first permanent installation of the ride, whether it is used off the shelf or modified before it is installed. Where amusement rides are moved after several seasons to another area of the park or to another park, the ride would not be considered newly designed or newly constructed.

Some amusement rides and attractions that have unique designs and features are not addressed by these requirements. In those situations, these requirements are to be applied to the extent possible. An example of an amusement ride not specifically addressed by these requirements includes "virtual reality" rides where the device does not move through a fixed course within a defined area. An accessible route must be provided to these rides. Where an attraction or ride has unique features for which there are no applicable scoping provisions, then a reasonable number, but at least one, of the features must be located on an accessible route. Where there are appropriate technical provisions, they must be applied to the elements that are covered by the scoping provisions. ■

USDOJ

Advisory 11B-234.1 General Exception. Mobile or temporary rides are those set up for short periods of time such as traveling carnivals, State and county fairs, and festivals. The amusement rides that are covered by Section 11B-234.1 are ones that are not regularly assembled and disassembled. ■

***11B*-234.2 Load and unload areas.** Load and unload areas serving amusement rides shall comply with *Section 11B*-1002.3.

***11B*-234.3 Minimum number.** Amusement rides shall provide at least one wheelchair space complying with *Section 11B*-1002.4, or at least one amusement ride seat designed for transfer complying with *Section 11B*-1002.5, or at least one transfer device complying with *Section 11B*-1002.6.

Exceptions:

1. Amusement rides that are controlled or operated by the rider shall not be required to comply with *Section 11B*-234.3.

2. Amusement rides designed primarily for children, where children are assisted on and off the ride by an adult, shall not be required to comply with *Section 11B*-234.3.

3. Amusement rides that do not provide amusement ride seats shall not be required to comply with *Section 11B*-234.3.

USDOJ

Advisory 11B-234.3 Minimum number Exceptions 1 through 3. Amusement rides controlled or operated by the rider, designed for children, or rides without ride seats are not required to comply with Section 11B-234.3. These rides are not exempt from the other provisions in Section 11B-234 requiring an accessible route to the load and unload areas and to the ride. The exception does not apply to those rides where patrons may cause the ride to make incidental movements, but where the patron otherwise has no control over the ride. ■

USDOJ

Advisory 11B-234.3 Minimum number Exception 2. The exception is limited to those rides designed "primarily" for children, where children are assisted on and off the ride by an adult. This exception is limited to those rides designed for children and not for the occasional adult user. An accessible route to and turning space in the load and unload area will provide access for adults and family members assisting children on and off these rides. ■

***11B*-234.4 Existing amusement rides.** Where existing amusement rides are altered, the alteration shall comply with *Section 11B*-234.4.

USDOJ

Advisory 11B-234.4 Existing amusement rides. Routine maintenance, painting, and changing of theme boards are examples of activities that do not constitute an alteration subject to this section. ■

***11B*-234.4.1 Load and unload areas.** Where load and unload areas serving existing amusement rides are newly designed and constructed, the load and unload areas shall comply with *Section 11B*-1002.3.

***11B*-234.4.2 Minimum number.** Where the structural or operational characteristics of an amusement ride are altered to the extent that the amusement ride's performance differs from that specified by the manufacturer or the original design, the amusement ride shall comply with *Section 11B*-234.3.

***11B*-235 Recreational boating facilities**

***11B*-235.1 General.** Recreational boating facilities shall comply with *Section 11B*-235.

***11B*-235.2 Boat slips.** Boat slips complying with *Section 11B*-1003.3.1 shall be provided in accordance with Table *11B*-235.2. Where the number of boat slips is not identified, each 40 feet (*12192 mm*) of boat slip edge provided along the perimeter of the pier shall be counted as one boat slip for the purpose of this section.

Table *11B*-235.2 Boat Slips

Total Number of Boat Slips Provided in Facility	Minimum Number of Required Accessible Boat Slips
1 to 25	1
26 to 50	2
51 to 100	3
101 to 150	4
151 to 300	5
301 to 400	6
401 to 500	7
501 to 600	8
601 to 700	9
701 to 800	10
801 to 900	11
901 to 1000	12
1001 and over	12, plus 1 for every 100, or fraction thereof, over 1000

USDOJ

Advisory 11B-235.2 Boat slips. The requirement for boat slips also applies to piers where boat slips are not demarcated. For example, a single pier 25 feet (7620 mm) long and 5 feet (1525 mm) wide (the minimum width specified by Section 11B-1003.3) allows boats to moor on three sides. Because the number of boat slips is not demarcated, the total length of boat slip edge (55 feet, 17 m) must be used to determine the number of boat slips provided (two). This number is based on the specification in Section 11B-235.2 that each 40 feet (12 m) of boat slip edge, or fraction thereof, counts as one boat slip. In this example, Table 11B-235.2 would require one boat slip to be accessible. ■

***11B*-235.2.1 Dispersion.** Boat slips complying with *Section 11B*-1003.3.1 shall be dispersed throughout the various types of boat slips provided. Where the minimum number of boat slips required to comply with *Section 11B*-1003.3.1 has been met, no further dispersion shall be required.

USDOJ

Advisory 11B-235.2.1 Dispersion. Types of boat slips are based on the size of the boat slips; whether single berths or double berths, shallow water or deep water, transient or longer-term lease, covered or uncovered; and whether slips are equipped with features such as telephone, water, electricity or cable connections. The term "boat slip" is intended to cover any pier area other than launch ramp boarding piers where recreational boats are moored for purposes of berthing, embarking, or disembarking. For example, a fuel pier may contain boat slips, and this type of short term slip would be included in determining compliance with Section 11B-235.2. ■

***11B*-235.3 Boarding piers at boat launch ramps.** Where boarding piers are provided at boat launch ramps, at least 5 percent, but no fewer than one, of the boarding piers shall comply with *Section 11B*-1003.3.2.

***11B*-236 Exercise machines and equipment**

***11B*-236.1 General.** At least one of each type of exercise machine and equipment shall comply with *Section 11B*-1004.

USDOJ

Advisory 11B-236.1 General. Most strength training equipment and machines are considered different types. Where operators provide a biceps curl machine and cable-cross-over machine, both machines are required to meet the provisions in this section, even though an individual may be able to work on their biceps through both types of equipment.

Similarly, there are many types of cardiovascular exercise machines, such as stationary bicycles, rowing machines, stair climbers, and treadmills. Each machine provides a cardiovascular exercise and is considered a different type for purposes of these requirements. ■

***11B*-237 Fishing piers and platforms**

***11B*-237.1 General.** Fishing piers and platforms shall comply with *Section 11B*-1005.

***11B*-238 Golf facilities**

***11B*-238.1 General.** Golf facilities shall comply with *Section 11B*-238.

***11B*-238.2 Golf courses.** Golf courses shall comply with *Section 11B*-238.2.

***11B*-238.2.1 Teeing grounds.** Where one teeing ground is provided for a hole, the teeing ground shall be designed and constructed so that a golf car can enter and exit the teeing ground. Where two teeing grounds are provided for a hole, the forward teeing ground shall be designed and constructed so that a golf car can enter and exit the teeing ground. Where three or more teeing grounds are provided for a hole, at least two teeing grounds, including the forward teeing ground, shall be designed and constructed so that a golf car can enter and exit each teeing ground.

Exception: In existing golf courses, the forward teeing ground shall not be required to be one of the teeing grounds on a hole designed and constructed so that a golf car can enter and exit the teeing ground where compliance is not feasible due to terrain.

***11B*-238.2.2 Putting greens.** Putting greens shall be designed and constructed so that a golf car can enter and exit the putting green.

***11B*-238.2.3 Weather shelters.** Where provided, weather shelters shall be designed and constructed so that a golf car can enter and exit the weather shelter and shall comply with *Section 11B*-1006.4.

***11B*-238.3 Practice putting greens, practice teeing grounds, and teeing stations at driving ranges.** At least 5 percent, but no fewer than one, of practice putting greens, practice teeing grounds, and teeing stations at driving ranges shall be designed and constructed so that a golf car can enter and exit the practice putting greens, practice teeing grounds, and teeing stations at driving ranges.

***11B*-239 Miniature golf facilities**

***11B*-239.1 General.** Miniature golf facilities shall comply with *Section 11B*-239.

***11B*-239.2 Minimum number.** At least 50 percent of holes on miniature golf courses shall comply with *Section 11B*-1007.3.

USDOJ

Advisory 11B-239.2 Minimum number. Where possible, providing access to all holes on a miniature golf course is recommended. If a course is designed with the minimum 50 percent accessible holes, designers or operators are encouraged to select holes which provide for an equivalent experience to the maximum extent possible. ■

***11B*-239.3 Miniature golf course configuration.** Miniature golf courses shall be configured so that the holes complying with *Section 11B*-1007.3 are consecutive. Miniature golf courses shall provide an accessible route from the last hole complying with *Section 11B*-1007.3 to the course entrance or exit without requiring travel through any other holes on the course.

Exception: One break in the sequence of consecutive holes shall be permitted provided that the last hole on the miniature golf course is the last hole in the sequence.

USDOJ

Advisory 11B-239.3 Miniature golf course configuration. Where only the minimum 50 percent of the holes are accessible, an accessible route from the last accessible hole to the course exit or entrance must not require travel back through other holes. In some cases, this may require an additional accessible route. Other options include increasing the number of accessible holes in a way that limits the distance needed to connect the last accessible hole with the course exit or entrance. ■

***11B*-240 Play areas**

***11B*-240.1 General.** Play areas for children ages 2 and over shall comply with *Section 11B*-240. Where separate play areas are provided within a site for specific age groups, each play area shall comply with *Section 11B*-240.

Exceptions:

1. Play areas located in family child care facilities where the proprietor actually resides shall not be required to comply with *Section 11B*-240.

2. In existing play areas, where play components are relocated for the purposes of creating safe use zones and the ground surface is not altered or extended for more than one use zone, the play area shall not be required to comply with *Section 11B*-240.

3. Amusement attractions shall not be required to comply with *Section 11B*-240.

4. Where play components are altered and the ground surface is not altered, the ground surface shall not be required to comply with *Section 11B*-1008.2.6 unless required by *Section 11B*-202.4.

USDOJ

Advisory 11B-240.1 General. Play areas may be located on exterior sites or within a building. Where separate play areas are provided within a site for children in specified age groups (e.g., preschool (ages 2 to 5) and school age (ages 5 to 12)), each play area must comply with this section. Where play areas are provided for the same age group on a site but are geographically separated (e.g., one is located next to a picnic area and another is located next to a softball field), they are considered separate play areas and each play area must comply with this section. ■

***11B*-240.1.1 Additions.** Where play areas are designed and constructed in phases, the requirements of *Section 11B*-240 shall apply to each successive addition so that when the addition is completed, the entire play area complies with all the applicable requirements of *Section 11B*-240.

USDOJ

Advisory 11B-240.1.1 Additions. These requirements are to be applied so that when each successive addition is completed, the entire play area complies with all applicable provisions. For example, a play area is built in two phases. In the first phase, there are 10 elevated play components and 10 elevated play components are added in the second phase for a total of 20 elevated play components in the play area. When the first phase was completed, at least 5 elevated play components, including at least 3 different types, were to be provided on an accessible route. When the second phase is completed, at least 10 elevated play components must be located on an accessible route, and at least 7 ground level play components, including 4 different types, must be provided on an accessible route. At the time the second phase is complete, ramps must be used to connect at least 5 of the elevated play components and transfer systems are permitted to be used to connect the rest of the elevated play components required to be located on an accessible route. ■

***11B*-240.2 Play components.** Where provided, play components shall comply with *Section 11B*-240.2.

***11B*-240.2.1 Ground level play components.** Ground level play components shall be provided in the number and types required by *Section 11B*-240.2.1. Ground level play components that are provided to comply with *Section 11B*-240.2.1.1 shall be permitted to satisfy the additional number required by *Section 11B*-240.2.1.2 if the minimum required types of play components are satisfied. Where two or more required ground level play components are provided, they shall be dispersed throughout the play area and integrated with other play components.

USDOJ

Advisory 11B-240.2.1 Ground level play components. Examples of ground level play components may include spring rockers, swings, diggers, and stand-alone slides. When distinguishing between the different types of ground level play components, consider the general experience provided by the play component. Examples of different types of experiences include, but are not limited to, rocking, swinging, climbing, spinning, and sliding. A spiral slide may provide a slightly different experience from a straight slide, but sliding is the general experience and therefore a spiral slide is not considered a different type of play component from a straight slide.

Ground level play components accessed by children with disabilities must be integrated into the play area. Designers should consider the optimal layout of ground level play components accessed by children with disabilities to foster interaction and socialization among all children. Grouping all ground level play components accessed by children with disabilities in one location is not considered integrated.

Where a stand-alone slide is provided, an accessible route must connect the base of the stairs at the entry point to the exit point of the slide. A ramp or transfer system to the top of the slide is not required. Where a sand box is provided, an accessible route must connect to the border of the sand box. Accessibility to the sand box would be enhanced by providing a transfer system into the sand or by providing a raised sand table with knee clearance complying with Section 11B-1008.4.3.

Ramps are preferred over transfer systems since not all children who use wheelchairs or other mobility devices may be able to use, or may choose not to use, transfer systems. Where ramps connect elevated play components, the maximum rise of any ramp run is limited to 12 inches (305 mm). Where possible, designers and operators are encouraged to provide ramps with a slope less than the 1:12 maximum. Berms or sculpted dirt may be used to provide elevation and may be part of an accessible route to composite play structures.

Platform lifts are permitted as a part of an accessible route. Because lifts must be independently operable, operators should carefully consider the appropriateness of their use in unsupervised settings. ■

***11B*-240.2.1.1 Minimum number and types.** Where ground level play components are provided, at least one of each type shall be on an accessible route and shall comply with *Section 11B*-1008.4.

***11B*-240.2.1.2 Additional number and types.** Where elevated play components are provided, ground level play components shall be provided in accordance with Table *11B*-240.2.1.2 and shall comply with *Section 11B*-1008.4.

Exception: If at least 50 percent of the elevated play components are connected by a ramp and at least 3 of the elevated play components connected by the ramp are different types of play components, the play area shall not be required to comply with *Section 11B*-240.2.1.2.

Table *11B*-240.2.1.2 Number and Types of Ground Level Play Components Required to be on Accessible Routes

Number of Elevated Play Components Provided	Minimum Number of Ground Level Play Components Required to be on an Accessible Route	Minimum Number of Different Types of Ground Level Play Components Required to be on an Accessible Route
1	Not applicable	Not applicable
2 to 4	1	1
5 to 7	2	2
8 to 10	3	3
11 to 13	4	3
14 to 16	5	3
17 to 19	6	3
20 to 22	7	4
23 to 25	8	4
26 and over	8, plus 1 for each additional 3, or fraction thereof, over 25	5

USDOJ

Advisory 11B-240.2.1.2 Additional number and types. Where a large play area includes two or more composite play structures designed for the same age group, the total number of elevated play components on all the composite play structures must be added to determine the additional number and types of ground level play components that must be provided on an accessible route. ■

***11B*-240.2.2 Elevated play components.** Where elevated play components are provided, at least 50 percent shall be on an accessible route and shall comply with *Section 11B*-1008.4.

USDOJ

Advisory 11B-240.2.2 Elevated play components. A double or triple slide that is part of a composite play structure is one elevated play component. For purposes of this section, ramps, transfer systems, steps, decks, and roofs are not considered elevated play components. Although socialization and pretend play can occur on these elements, they are not primarily intended for play.

Some play components that are attached to a composite play structure can be approached or exited at the ground level or above grade from a platform or deck. For example, a climber attached to a composite play structure can be approached or exited at the ground level or above grade from a platform or deck on a composite play structure. Play components that are attached to a composite play structure and can be approached from a platform or deck (e.g., climbers and overhead play components) are considered elevated play components. These play components are not considered ground level play components and do not count toward the requirements in Section 11B-240.2.1.2 regarding the number of ground level play components that must be located on an accessible route. ■

***11B*-241 Saunas and steam rooms**

***11B*-241 General.** Where provided, saunas and steam rooms shall comply with *Section 11B*-612.

Exception: Where saunas or steam rooms are clustered at a single location, no more than 5 percent of the saunas and steam rooms, but no fewer than one, of each type in each cluster shall be required to comply with *Section 11B*-612.

***11B*-242 Swimming pools, wading pools, and spas**

***11B*-242.1 General.** Swimming pools, wading pools, and spas shall comply with *Section 11B*-242.

***11B*-242.2 Swimming pools.** At least two accessible means of entry shall be provided for swimming pools. Accessible means of entry shall be swimming pool lifts complying with *Section 11B*-1009.2; sloped entries complying with *Section 11B*-1009.3; transfer walls complying with *Section 11B*-1009.4; transfer systems complying with *Section 11B*-1009.5; and pool stairs complying with *Section 11B*-1009.6. At least one accessible means of entry provided shall comply with *Section 11B*-1009.2 or *11B*-1009.3.

Exceptions:

1. Where a swimming pool has less than 300 linear feet (91 m) of swimming pool wall, no more than one accessible means of entry shall be required provided that the accessible means of entry is a swimming pool lift complying with *Section 11B*-1009.2 or sloped entry complying with *Section 11B*-1009.3.

2. Wave action pools, leisure rivers, sand bottom pools, and other pools where user access is limited to one area shall not be required to provide more than one accessible means of entry provided that the accessible means of entry is a swimming pool lift complying with *Section 11B*-1009.2, a sloped entry complying with *Section 11B*-1009.3, or a transfer system complying with *Section 11B*-1009.5.

3. Catch pools shall not be required to provide an accessible means of entry provided that the catch pool edge is on an accessible route.

USDOJ

Advisory 11B-242.2 Swimming pools. Where more than one means of access is provided into the water, it is recommended that the means be different. Providing different means of access will better serve the varying needs of people with disabilities in getting into and out of a swimming pool. It is also recommended that where two or more means of access are provided, they not be provided in the same location in the pool. Different locations will provide increased options for entry and exit, especially in larger pools. ■

USDOJ

Advisory 11B-242.2 Swimming pools Exception 1. Pool walls at diving areas and areas along pool walls where there is no pool entry because of landscaping or adjacent structures are to be counted when determining the number of accessible means of entry required. ■

***11B*-242.3 Wading pools.** At least one accessible means of entry shall be provided for wading pools. Accessible means of entry shall comply with sloped entries complying with *Section 11B*-1009.3.

***11B*-242.4 Spas.** At least one accessible means of entry shall be provided for spas. Accessible means of entry shall comply with swimming pool lifts complying with *Section 11B*-1009.2; transfer walls complying with *Section 11B*-1009.4; or transfer systems complying with *Section 11B*-1009.5.

Exception: Where spas are provided in a cluster, no more than 5 percent, but no fewer than one, spa in each cluster shall be required to comply with *Section 11B*-242.4.

***11B*-243 Shooting facilities with firing positions**

***11B*-243.1 General.** Where shooting facilities with firing positions are designed and constructed at a site, at least 5 percent, but no fewer than one, of each type of firing position shall comply with *Section 11B*-1010.

11B-244 Religious facilities

11B-244.1 General. *Religious facilities shall be accessible in accordance with the provisions of this code. Where specific areas within religious facilities contain more than one use, each portion shall comply with the applicable requirements for that use.*

DSA

Advisory 11B-244.1 General. Religious facilities are exempt from federal ADA requirements, however no exception is provided for these types of facilities under the California Building Code (CBC) due to pre-existing and more stringent state regulations. Religious practice may restrict general access to specific areas, for example a raised altar area; however access for persons with disabilities to these areas may be required. The CBC requires raised areas of the facility to provide access by ramp, special access lift or elevator. Religious beliefs and practices notwithstanding, architectural barriers are not permitted at participation areas. ■

11B-245 Commercial facilities located in private residences

11B-245.1 General. *Commercial facilities located in private residences shall comply with Section 11B-245.*

11B-245.2 Application. *When a commercial facility is located in a private residence, that portion used exclusively in the operation of the commercial facility or that portion used both for the commercial facility and for residential purposes is covered by the new construction and alterations requirements of this chapter.*

> ***Exception:*** *The portion of the residence used exclusively as a residence is not required to be accessible in accordance with this chapter.*

11B-245.3 Accessible elements required. *The accessible portion of the residence extends to those elements used to enter the commercial facility, including the front sidewalk, if any, the door or entryway, and hallways; and those portions of the residence, interior or exterior, available to or used by employees or visitors of the commercial facility, including restrooms.*

11B-246 Outdoor developed areas

11B-246.1 General. *Outdoor developed areas shall comply with Section 11B-246.*

> ***Exceptions:***
>
> 1. *Where the enforcing agency finds that, in specific areas, the natural environment would be materially damaged by compliance with these regulations, such areas shall be subject to these regulations only to the extent that such material damage would not occur.*
>
> 2. *Automobile access or accessible routes are not required when the enforcing agency determines compliance with this chapter would create an unreasonable hardship as defined in Chapter 2, Section 202.*

DSA

Advisory 11B-246.1 General. Additional information regarding accessibility best practices for outdoor occupancies can be found in the California State Parks Accessibility Guidelines available on the California State Parks website and the Draft Final Guidelines for Outdoor Developed Areas on the U.S. Access Board website. ■

11B-246.2 Camping facilities. *In camping facilities where campsites are provided, at least two campsites and one additional campsite for each 100 campsites or fraction thereof, shall be accessed by and connected to sanitary facilities by travel routes with a maximum slope of 1:12. Permanent toilet and bathing facilities serving campsites shall comply with Section 11B-603.*

11B-246.3 Beaches. *Beaches shall be accessible.*

11B-246.4 Day use areas and vista points. *Day use areas, vista points, and similar areas shall be accessible.*

11B-246.5 Picnic areas. *Where picnic tables are provided, at least one picnic table, and one additional table for each 20 tables or fraction thereof, shall be accessible and comply with Section 11B-902.*

11B-246.6 Parking lots. *Parking lots shall comply with Sections 11B-208 and 11B-502 and shall be provided with curb cuts leading to adjacent walks, paths or trails.*

11B-246.7 Trails and paths. *Trails, paths and nature walk areas, or portions of them, shall be constructed with gradients permitting at least partial use by wheelchair occupants. Buildings and other functional areas shall be served by paths or walks with firm and stable surfaces.*

11B-246.8 Nature trails. *Nature trails and similar educational and informational areas shall be accessible to individuals with vision impairments by the provision of rope guidelines, raised Arabic numerals and symbols, or other similar guide and assistance devices.*

11B-247 Detectable warnings and detectable directional texture

11B-247.1 Detectable warnings.

11B-247.1.1 General. *Detectable warnings shall be provided in accordance with Section 11B-247.1 and shall comply with Section 11B-705.1.*

DSA

Advisory 11B-247.1.1 General. Detectable warnings are provided for the benefit of persons with visual impairments to indicate transitions to potentially hazardous areas. ■

11B-247.1.2 Where required. *Detectable warnings shall be provided where required by Section 11B-247.1.2.*

11B-247.1.2.1 Platform edges. *Platform boarding edges shall have detectable warnings complying with Sections 11B-705.1.1 and 11B-705.1.2.1.*

11B-247.1.2.2 Curb ramps. *Curb ramps shall have detectable warnings complying with Sections 11B-705.1.1 and 11B-705.1.2.2.*

11B-247.1.2.3 Islands or cut-through medians. *Islands or cut-through medians shall have detectable warnings complying with Sections 11B-705.1.1 and 11B-705.1.2.3.*

11B-247.1.2.4 Bus stops. *Where detectable warnings are provided at bus stop boarding and alighting areas in compliance with Section 11B-810.2.3, detectable warnings shall comply with Sections 11B-705.1.1 and 11B-705.1.2.4.*

11B-247.1.2.5 Hazardous vehicular areas. *If a walk crosses or adjoins a vehicular way, and the walking surfaces are not separated by curbs, railings or other elements between the pedestrian areas and vehicular areas, the boundary between the areas shall be defined by a continuous detectable warning complying with Sections 11B-705.1.1 and 11B-705.1.2.5.*

11B-247.1.2.6 Reflecting pools. *The edges of reflecting pools shall be protected by railings, walls, warning curbs or detectable warnings complying with Sections 11B-705.1.1 and 11B-705.1.2.6.*

11B-247.1.2.7 Track crossings. *Where it is necessary to cross tracks to reach transit boarding platforms, detectable warnings complying with Sections 11B-705.1.1 and 11B-705.1.2.7 shall be provided.*

11B-247.2 Detectable directional texture. *At transit boarding platforms, the pedestrian access shall be identified with a detectable directional texture complying with Section 11B-705.2.*

11B-301 General

***11B*-301.1 Scope.** The provisions of *Division* 3 shall apply where required by *Division* 2 or where referenced by a requirement in this *chapter*.

11B-302 Floor or ground surfaces

***11B*-302.1 General.** Floor and ground surfaces shall be stable, firm, and slip resistant and shall comply with *Section 11B*-302.

Exceptions:

1. Within animal containment areas, floor and ground surfaces shall not be required to be stable, firm, and slip resistant.

2. Areas of sport activity shall not be required to comply with *Section 11B*-302.

USDOJ

Advisory 11B-302.1 General. A stable surface is one that remains unchanged by contaminants or applied force, so that when the contaminant or force is removed, the surface returns to its original condition. A firm surface resists deformation by either indentations or particles moving on its surface. A slip-resistant surface provides sufficient frictional counterforce to the forces exerted in walking to permit safe ambulation. ■

DSA

Advisory 11B-302.1 General. Outdoor walking surfaces are often constructed of concrete or asphalt. Where permeable surfaces such as compacted decomposed granite or similar material are part of the accessible route, stabilizing admixtures or binders can help to provide a firm, stable and slip-resistant surface. Such surfaces should be edged or otherwise contained to provide stability. The maintenance required to keep these surfaces firm and stable should be considered when selecting such materials.

Additional information regarding accessible exterior surfaces is available on the US Access Board website at http://www.access-board.gov/research/completed-research/accessible-exterior-surfaces. ■

***11B*-302.2 Carpet.** Carpet or carpet tile shall be securely attached and shall have a firm cushion, pad, or backing or no cushion or pad. Carpet or carpet tile shall have a level loop, textured loop, level cut pile, or level cut/uncut pile texture. Pile height shall be ½ inch (*12.7* mm) maximum. Exposed edges of carpet shall be fastened to floor surfaces and shall have trim on the entire length of the exposed edge. Carpet edge trim shall comply with *Section 11B*-303.

USDOJ

Advisory 11B-302.2 Carpet. Carpets and permanently affixed mats can significantly increase the amount of force (roll resistance) needed to propel a wheelchair over a surface. The firmer the carpeting and backing, the lower the roll resistance. A pile thickness up to 1/2 inch (13 mm) (measured to the backing, cushion, or pad) is allowed, although a lower pile provides easier wheelchair maneuvering. If a backing, cushion or pad is used, it must be firm.

Preferably, carpet pad should not be used because the soft padding increases roll resistance. ■

DSA

Advisory 11B-302.2 Carpet. The accessibility provisions of the California Building Code apply only to the design, alteration, and new construction of buildings and facilities, not to movable floor mats. However, if floor mats are built-in as part of new construction or alterations, and are part of an accessible route, they must comply with the accessibility provisions of this section and Section 11B-302.1 which requires firm, stable and slip-resistant surfaces along accessible routes.

However, in addition to circumstances in which the California Building Code applies to built-in floor mats, there may also be circumstances in which Americans with Disabilities Act (ADA) requirements apply to floor mats that are not built in. If movable floor mats impede access for people with disabilities, they may need to be moved or removed under Section 36.304 of the ADA Title III regulations. That section requires that a public accommodation remove barriers in existing facilities where removing them is "readily achievable," that is, easily accomplishable and able to be carried out without much difficulty or expense. Even though the requirements of the this chapter would not apply to the mats themselves, the ADA regulations can provide helpful guidance in ensuring that mats do not constitute barriers. ■

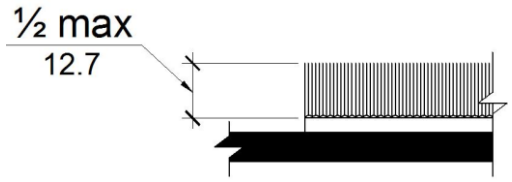

Figure *11B*-302.2
Carpet Pile Height

***11B*-302.3 Openings.** Openings in floor or ground surfaces shall not allow passage of a sphere more than ½ inch (*12.7* mm) diameter except as allowed in *Sections 11B*-407.4.3, *11B*-409.4.3, *11B*-410.4, *11B*-810.5.3 and *11B*-810.10. Elongated openings shall be placed so that the long dimension is perpendicular to the dominant direction of travel.

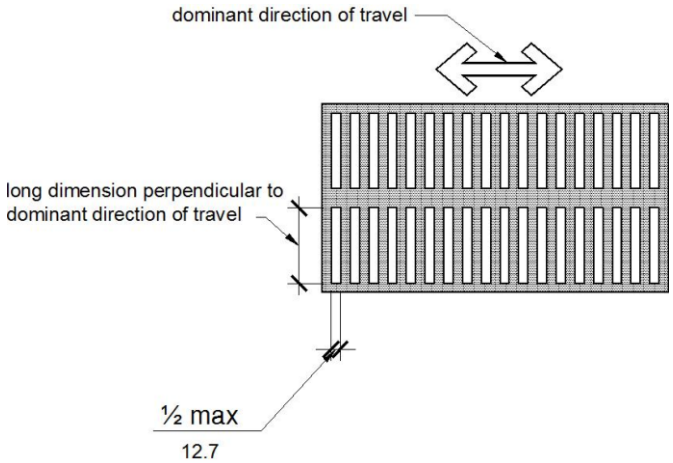

Figure *11B*-302.3
Elongated Openings in Floor or Ground Surfaces

***11B*-303 Changes in level**

***11B*-303.1 General.** Where changes in level are permitted in floor or ground surfaces, they shall comply with *Section 11B*-303.

Exceptions:

1. Animal containment areas shall not be required to comply with *Section 11B*-303.

2. Areas of sport activity shall not be required to comply with *Section 11B*-303.

***11B*-303.2 Vertical.** Changes in level of ¼ inch (6.4 mm) high maximum shall be permitted to be vertical *and without edge treatment*.

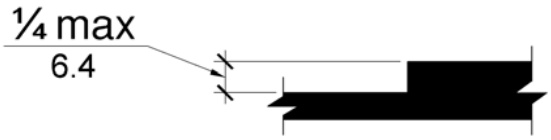

Figure *11B*-303.2
Vertical Change in Level

***11B*-303.3 Beveled.** Changes in level between ¼ inch (6.4 mm) high minimum and ½ inch (*12.7* mm) high maximum shall be beveled with a slope not steeper than 1:2.

USDOJ

Advisory 11B-303.3 Beveled. A change in level of 1/2 inch (13 mm) is permitted to be 1/4 inch (6.4 mm) vertical plus 1/4 inch (6.4 mm) beveled. However, in no case may the combined change in level exceed 1/2 inch (13 mm). Changes in level exceeding 1/2 inch (13 mm) must comply with Sections 11B-405 (Ramps) or 11B-406 (Curb Ramps). ■

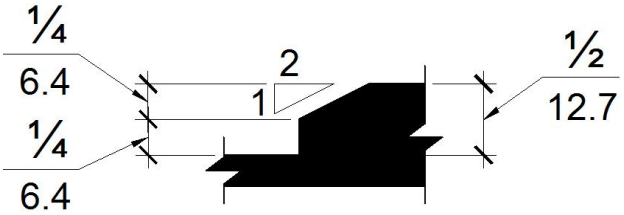

Figure *11B*-303.3
Beveled Change in Level

***11B*-303.4 Ramps.** Changes in level greater than ½ inch (*12.7* mm) high shall be ramped, and shall comply with *Section 11B*-405 or *11B*-406.

11B-303.5 Warning curbs. *Abrupt changes in level exceeding 4 inches (102 mm) in a vertical dimension between walks, sidewalks or other pedestrian ways and adjacent surfaces or features shall be identified by warning curbs at least 6 inches (152 mm) in height above the walk or sidewalk surface.*

Exceptions:

1. *A warning curb is not required between a walk or sidewalk and an adjacent street or driveway.*

2. *A warning curb is not required when a guard or handrail is provided with a guide rail centered 2 inches (51 mm) minimum and 4 inches (102 mm) maximum above the surface of the walk or sidewalk.*

***11B*-304 Turning space**

***11B*-304.1 General.** Turning space shall comply with *Section 11B*-304.

***11B*-304.2 Floor or ground surfaces.** Floor or ground surfaces of a turning space shall comply with *Section 11B*-302. Changes in level are not permitted.

Exception: Slopes not steeper than 1:48 shall be permitted.

USDOJ

Advisory 11B-304.2 Floor or ground surface Exception. As used in this section, the phrase "changes in level" refers to surfaces with slopes and to surfaces with abrupt rise exceeding that permitted in Section 11B-303.3. Such changes in level are prohibited in required clear floor and ground spaces, turning spaces, and in similar spaces where people using wheelchairs and other mobility devices must park their mobility aids such as in wheelchair spaces, or maneuver to use elements such as at doors, fixtures, and telephones. The exception permits slopes not steeper than 1:48. ■

***11B*-304.3 Size.** Turning space shall comply with *Section 11B*-304.3.1 or *11B*-304.3.2.

***11B*-304.3.1 Circular space.** The turning space shall be a space of 60 inches (*1524* mm) diameter minimum. The space shall be permitted to include knee and toe clearance complying with *Section 11B*-306.

***11B*-304.3.2 T-Shaped space.** The turning space shall be a T-shaped space within a 60 inch (*1524* mm) square minimum with arms and base 36 inches (*914* mm) wide minimum. Each arm of the T shall be clear of obstructions 12 inches (305 mm) minimum in each direction and the base shall be clear of obstructions 24 inches (610 mm) minimum. The space shall be permitted to include knee and toe clearance complying with *Section 11B*-306 only at the end of either the base or one arm.

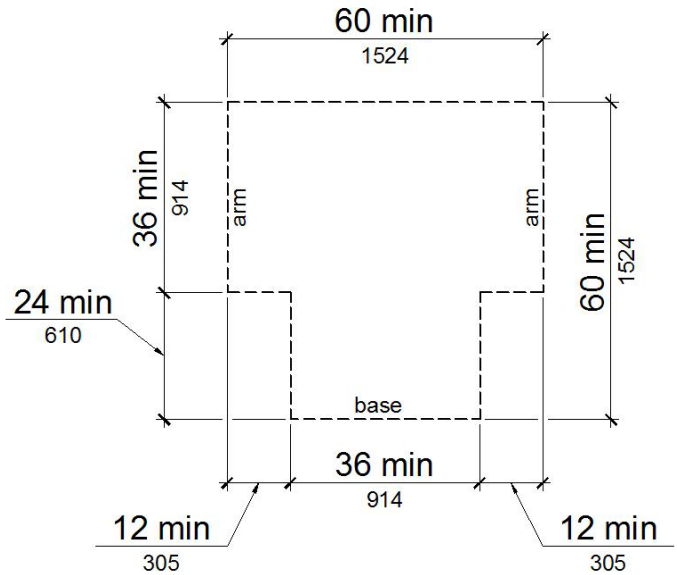

Figure *11B*-304.3.2
T-Shaped Turning Space

***11B*-304.4 Door swing.** Doors shall be permitted to swing into turning spaces.

***11B*-305 Clear floor or ground space**

***11B*-305.1 General.** Clear floor or ground space shall comply with *Section 11B*-305.

***11B*-305.2 Floor or ground surfaces.** Floor or ground surfaces of a clear floor or ground space shall comply with *Section 11B*-302. Changes in level are not permitted.

Exception: Slopes not steeper than 1:48 shall be permitted.

***11B*-305.3 Size.** The clear floor or ground space shall be 30 inches (*762* mm) minimum by 48 inches (*1219* mm) minimum.

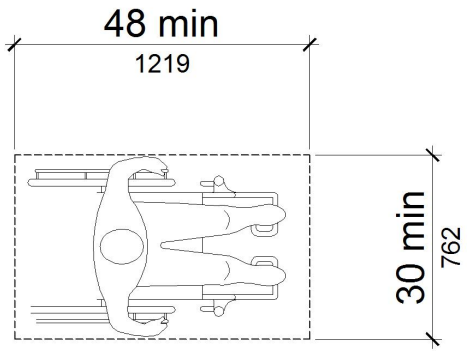

Figure *11B*-305.3
Clear Floor or Ground Space

***11B*-305.4 Knee and toe clearance.** Unless otherwise specified, clear floor or ground space shall be permitted to include knee and toe clearance complying with *Section 11B*-306.

***11B*-305.5 Position.** Unless otherwise specified, clear floor or ground space shall be positioned for either forward or parallel approach to an element.

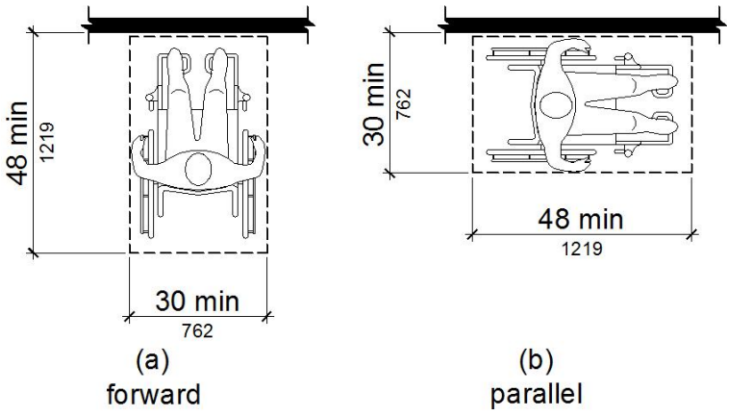

Figure *11B*-305.5
Position of Clear Floor or Ground Space

***11B*-305.6 Approach.** One full unobstructed side of the clear floor or ground space shall adjoin an accessible route or adjoin another clear floor or ground space. *Clear floor or ground space may overlap an accessible route, unless specifically prohibited elsewhere in this chapter.*

***11B*-305.7 Maneuvering clearance.** Where a clear floor or ground space is located in an alcove or otherwise confined on all or part of three sides, additional maneuvering clearance shall be provided in accordance with *Sections 11B*-305.7.1 and *11B*-305.7.2.

***11B*-305.7.1 Forward approach.** Alcoves shall be 36 inches (*914* mm) wide minimum where the depth exceeds 24 inches (610 mm).

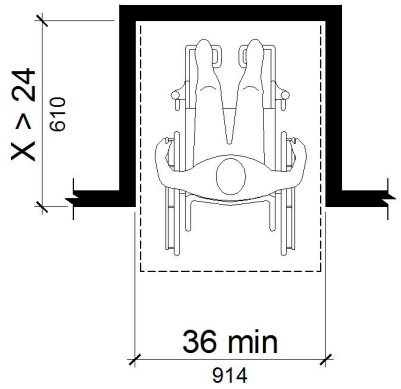

Figure *11B*-305.7.1
Maneuvering Clearance in an Alcove, Forward Approach

***11B*-305.7.2 Parallel approach.** Alcoves shall be 60 inches (*1524* mm) wide minimum where the depth exceeds 15 inches (*381* mm).

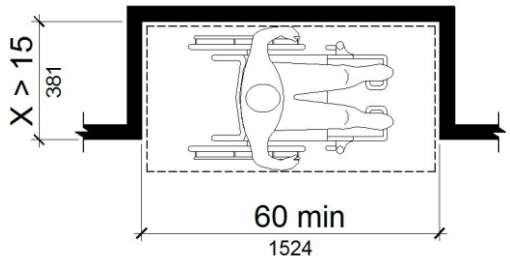

Figure *11B*-305.7.2
Maneuvering Clearance in an Alcove, Parallel Approach

***11B*-306 Knee and toe clearance**

***11B*-306.1 General.** Where space beneath an element is included as part of clear floor or ground space or turning space, the space shall comply with *Section 11B*-306. Additional space shall not be prohibited beneath an element but shall not be considered as part of the clear floor or ground space or turning space.

USDOJ

Advisory 11B-306.1 General. Clearances are measured in relation to the usable clear floor space, not necessarily to the vertical support for an element. When determining clearance under an object for required turning or maneuvering space, care should be taken to ensure the space is clear of any obstructions. ■

***11B*-306.2 Toe clearance.**

***11B*-306.2.1 General.** Space under an element between the finish floor or ground and 9 inches (*229* mm) above the finish floor or ground shall be considered toe clearance and shall comply with *Section 11B*-306.2.

***11B*-306.2.2 Maximum depth.** Toe clearance shall extend 25 inches (635 mm) maximum under an element.

> ***Exception:*** *Toe clearance shall extend 19 inches (483 mm) maximum under lavatories required to be accessible by Section 11B-213.3.4.*

***11B*-306.2.3 Minimum required depth.** Where toe clearance is required at an element as part of a clear floor space, the toe clearance shall extend 17 inches (*432* mm) minimum under the element.

> ***Exceptions:***
>
> 1. *The toe clearance shall extend 19 inches (483 mm) minimum under sinks required to be accessible by Section 11B-212.3.*
>
> 2. *The toe clearance shall extend 19 inches (483 mm) minimum under built-in dining and work surfaces required to be accessible by Section 11B-226.1.*

***11B*-306.2.4 Additional clearance.** Space extending greater than 6 inches (*152* mm) beyond the available knee clearance at 9 inches (*229* mm) above the finish floor or ground shall not be considered toe clearance.

***11B*-306.2.5 Width.** Toe clearance shall be 30 inches (*762* mm) wide minimum.

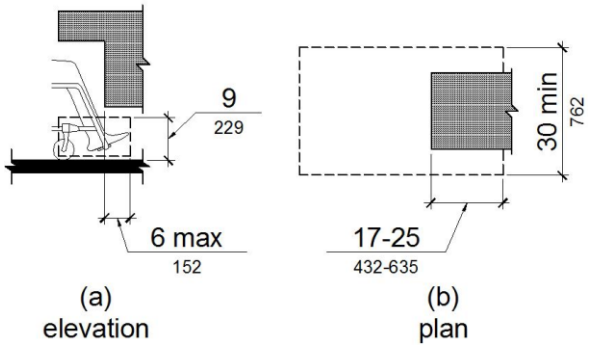

Figure *11B*-306.2
Toe Clearance

***11B*-306.3 Knee clearance.**

***11B*-306.3.1 General.** Space under an element between 9 inches (*229* mm) and 27 inches (*686* mm) above the finish floor or ground shall be considered knee clearance and shall comply with *Section 11B*-306.3.

> ***Exception:*** *At lavatories required to be accessible by Section 11B-213.3.4, space between 9 inches (229 mm) and 29 inches (737 mm) above the finish floor or ground, shall be considered knee clearance.*

***11B*- 306.3.2 Maximum depth.** Knee clearance shall extend 25 inches (635 mm) maximum under an element at 9 inches (*229* mm) above the finish floor or ground.

***11B*-306.3.3 Minimum required depth.** Where knee clearance is required under an element as part of a clear floor space, the knee clearance shall be 11 inches (*279* mm) deep minimum at 9 inches

(*229* mm) above the finish floor or ground, and 8 inches (*203* mm) deep minimum at 27 inches (*686* mm) above the finish floor or ground.

Exceptions:

1. *At lavatories required to be accessible by Section 11B-213.3.4, the knee clearance shall be 27 inches (686 mm) high minimum above the finish floor or ground at a depth of 8 inches (203 mm) minimum increasing to 29 inches (737 mm) high minimum above the finish floor or ground at the front edge of a counter with a built-in lavatory or at the front edge of a wall-mounted lavatory fixture.*

2. *At dining and work surfaces required to be accessible by Section 11B-226.1, knee clearance shall extend 19 inches (483 mm) deep minimum at 27 inches (686 mm) above the finish floor or ground.*

***11B*-306.3.4 Clearance reduction.** Between 9 inches (*229* mm) and 27 inches (*686* mm) above the finish floor or ground, the knee clearance shall be permitted to reduce at a rate of 1 inch (25 mm) in depth for each 6 inches (*152* mm) in height.

Exception: *The knee clearance shall not be reduced at built-in dining and work surfaces required to be accessible by Section 11B-226.1.*

***11B*-306.3.5 Width.** Knee clearance shall be 30 inches (*762* mm) wide minimum.

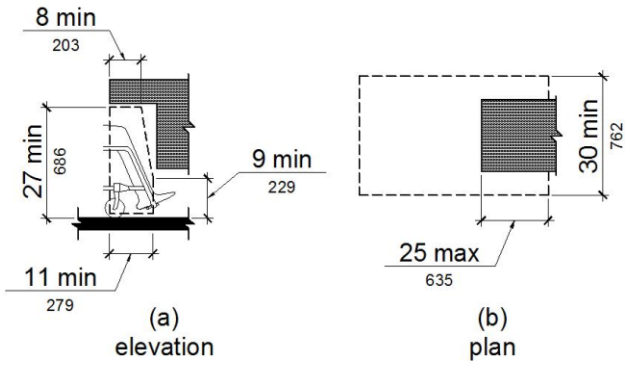

Figure *11B*-306.3
Knee Clearance

***11B*-307 Protruding objects**

***11B*-307.1 General.** Protruding objects shall comply with *Section 11B*-307.

***11B*-307.2 Protrusion limits.** Objects with leading edges more than 27 inches (*686* mm) and not more than 80 inches (*2032* mm) above the finish floor or ground shall protrude 4 inches (*102* mm) maximum horizontally into the circulation path.

Exception: Handrails shall be permitted to protrude 4½ inches (*114* mm) maximum.

USDOJ

Advisory 11B-307.2 Protrusion limits. When a cane is used and the element is in the detectable range, it gives a person sufficient time to detect the element with the cane before there is body contact. Elements located on circulation paths, including operable elements, must comply with requirements for protruding objects. For example, awnings and their supporting structures cannot reduce the minimum required vertical clearance. Similarly, casement windows, when open, cannot encroach more than 4 inches (100 mm) into

circulation paths above 27 inches (685 mm). ■

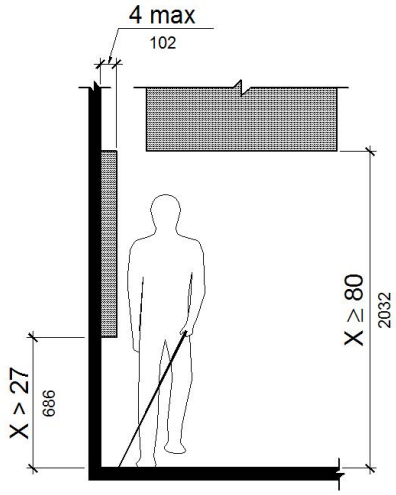

Figure *11B*-307.2
Limits of Protruding Objects

11B-307.3.1 Edges and corners. *Where signs or other objects are mounted on posts or pylons, and their bottom edges are less than 80 inches (2032 mm) above the floor or ground surface, the edges of such signs and objects shall be rounded or eased and the corners shall have a minimum radius of ⅛ inch (3.2 mm).*

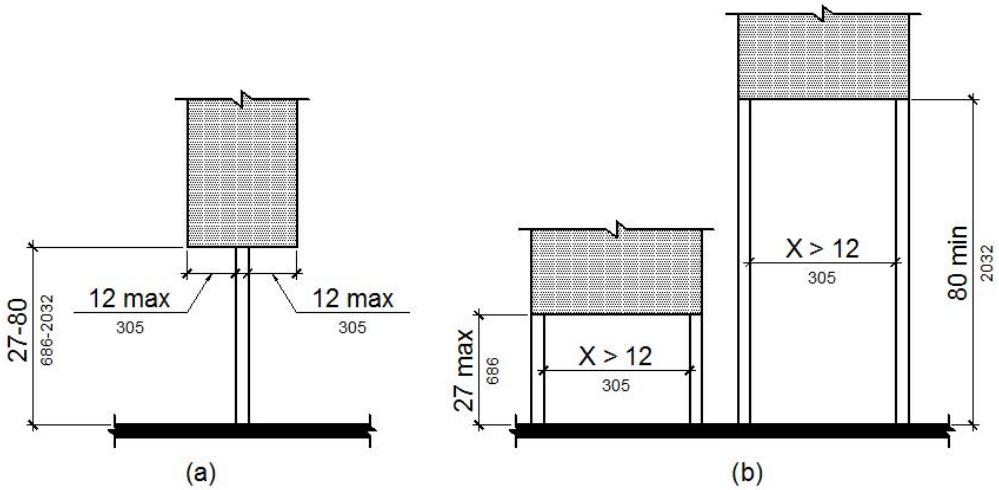

Figure *11B*-307.3
Post-Mounted Protruding Objects

***11B*-307.4 Vertical clearance.** Vertical clearance shall be 80 inches (*2032* mm) high minimum. Guardrails or other barriers shall be provided where the vertical clearance is less than 80 inches (*2032* mm) high. The leading edge of such guardrail or barrier shall be located 27 inches (*686* mm) maximum above the finish floor or ground.

Exception: Door closers and door stops shall be permitted to be 78 inches (*1981* mm) minimum above the finish floor or ground.

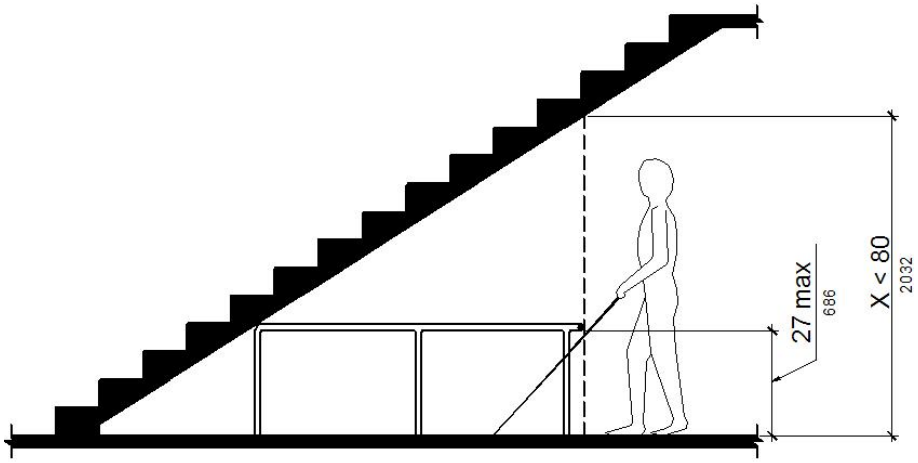

Figure *11B*-307.4
Vertical Clearance

11B-307.4.1 Guy braces. *Where a guy support is used within either the width of a circulation path or 24 inches (610 mm) maximum outside of a circulation path, a vertical guy brace, sidewalk guy or similar device shall be used to prevent a hazard or an overhead obstruction.*

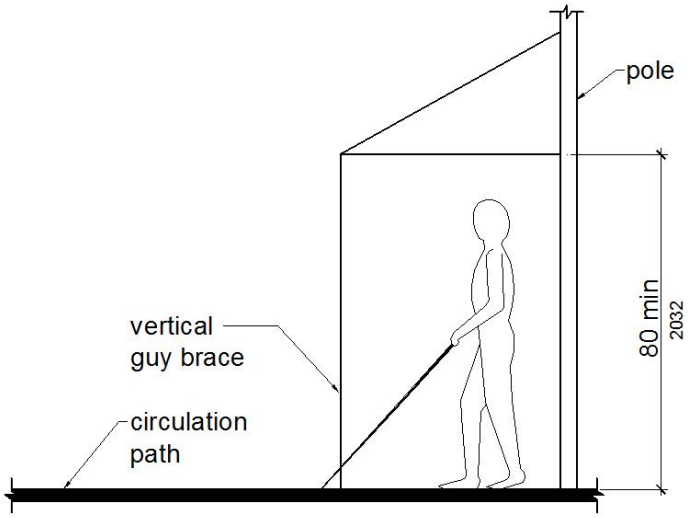

Figure 11B-307.4.1
Guy Braces

***11B*-307.5 Required clear width.** Protruding objects shall not reduce the clear width required for accessible routes.

***11B*-308 Reach ranges**

***11B*-308.1 General.** Reach ranges shall comply with *Section 11B*-308.

USDOJ

Advisory 11B-308.1 General. The following table provides guidance on reach ranges for children according to age where building elements such as coat hooks, lockers, or operable parts are designed for use primarily by children. These dimensions apply to either forward or

side reaches. Accessible elements and operable parts designed for adult use or children over age 12 can be located outside these ranges but must be within the adult reach ranges required by Section 11B-308. ■

Children's Reach Ranges			
Forward or Side Reach	**Ages 3 and 4**	**Ages 5 through 8**	**Ages 9 through 12**
High (maximum)	36 in (915 mm)	40 in (1015 mm)	44 in (1120 mm)
Low (minimum)	20 in (510 mm)	18 in (455 mm)	16 in (405 mm)

11B-308.1.1 Electrical switches. *Controls and switches intended to be used by the occupant of a room or area to control lighting and receptacle outlets, appliances or cooling, heating and ventilating equipment, shall comply with Section 11B-308 except the low reach shall be measured to the bottom of the outlet box and the high reach shall be measured to the top of the outlet box.*

11B-308.1.2 Electrical receptacle outlets. *Electrical receptacle outlets on branch circuits of 30 amperes or less and communication system receptacles shall comply with Section 11B-308 except the low reach shall be measured to the bottom of the outlet box and the high reach shall be measured to the top of the outlet box.*

***11B*-308.2 Forward reach.**

***11B*-308.2.1 Unobstructed.** Where a forward reach is unobstructed, the high forward reach shall be 48 inches (*1219* mm) maximum and the low forward reach shall be 15 inches (*381* mm) minimum above the finish floor or ground.

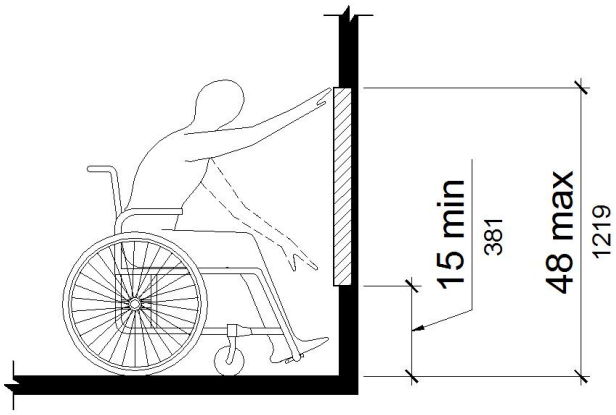

Figure *11B*-308.2.1
Unobstructed Forward Reach

***11B*-308.2.2 Obstructed high reach.** Where a high forward reach is over an obstruction, the clear floor space shall extend beneath the element for a distance not less than the required reach depth over the obstruction. The high forward reach shall be 48 inches (*1219* mm) maximum where the reach depth is 20 inches (*508* mm) maximum. Where the reach depth exceeds 20 inches (*508* mm), the high forward reach shall be 44 inches (*1118* mm) maximum and the reach depth shall be 25 inches (635 mm) maximum.

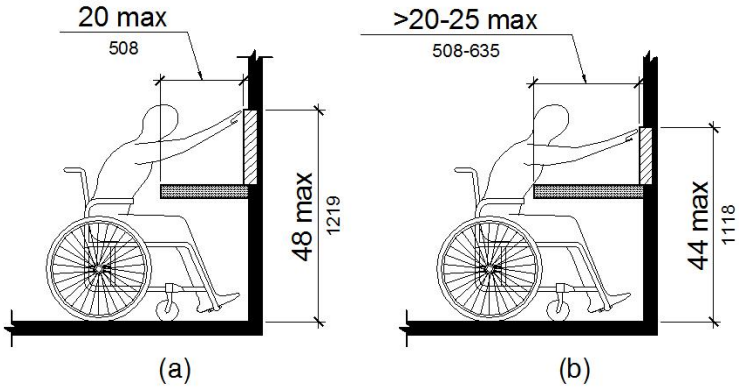

Figure *11B*-308.2.2
Obstructed High Forward Reach

***11B*-308.3 Side reach.**

***11B*-308.3.1 Unobstructed.** Where a clear floor or ground space allows a parallel approach to an element and the side reach is unobstructed, the high side reach shall be 48 inches (*1219* mm) maximum and the low side reach shall be 15 inches (*381* mm) minimum above the finish floor or ground.

Exceptions:

1. An obstruction shall be permitted between the clear floor or ground space and the element where the depth of the obstruction is 10 inches (*254* mm) maximum.

2. Operable parts of fuel dispensers shall be permitted to be 54 inches (*1372* mm) maximum measured from the surface of the vehicular way where fuel dispensers are installed on existing curbs.

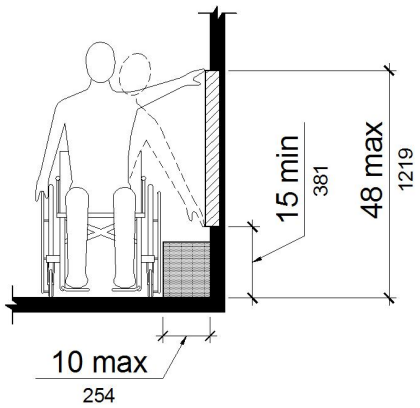

Figure *11B*-308.3.1
Unobstructed Side Reach

***11B*-308.3.2 Obstructed high reach.** Where a clear floor or ground space allows a parallel approach to an element and the high side reach is over an obstruction, the height of the obstruction shall be 34 inches (*864* mm) maximum and the depth of the obstruction shall be 24 inches (610 mm) maximum. The high side reach shall be 48 inches (*1219* mm) maximum for a reach depth of 10 inches (*254* mm) maximum. Where the reach depth exceeds 10 inches (*254* mm), the high side reach shall be 46 inches (*1168* mm) maximum for a reach depth of 24 inches (610 mm) maximum.

Exceptions:

1. The top of washing machines and clothes dryers shall be permitted to be 36 inches (*914* mm) maximum above the finish floor.

2. Operable parts of fuel dispensers shall be permitted to be 54 inches (*1372* mm) maximum measured from the surface of the vehicular way where fuel dispensers are installed on existing curbs.

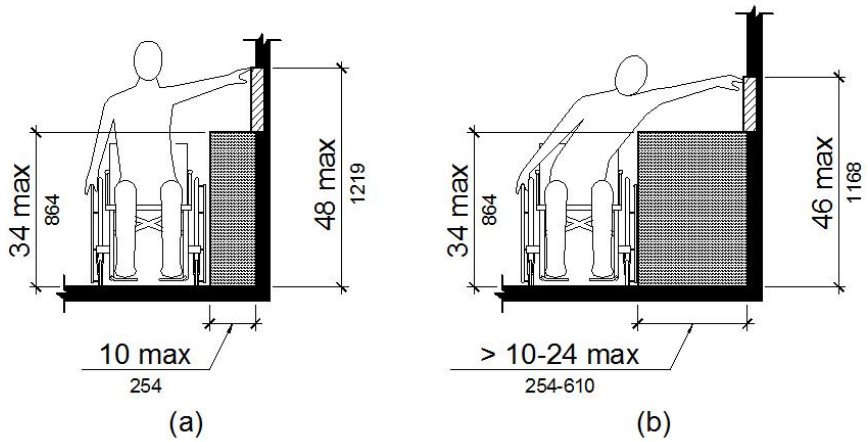

Figure *11B*-308.3.2
Obstructed High Side Reach

11B-308.4 Suggested reach ranges for children. *Where building elements such as coat hooks, lockers, or operable parts are designed for use primarily by children, the suggested dimensions of Table 11B-308.4 shall be permitted. These dimensions apply to either forward or side reaches.*

Table 11B-308.4 Suggested Dimensions for Children's Use

Suggested Reach Ranges for Children Ages 3 through 12			
Forward or Side Reach	***Ages 3 and 4***	***Ages 5 through 8***	***Ages 9 through 12***
High (maximum)	*36 inches (914 mm)*	*40 inches (1016 mm)*	*44 inches (1118 mm)*
Low (minimum)	*20 inches (508 mm)*	*18 inches (457 mm)*	*16 inches (406 mm)*

***11B*-309 Operable parts**

***11B*-309.1 General.** Operable parts shall comply with *Section 11B*-309.

***11B*-309.2 Clear floor space.** A clear floor or ground space complying with *Section 11B*-305 shall be provided.

***11B*-309.3 Height.** Operable parts shall be placed within one or more of the reach ranges specified in *Section 11B*-308.

***11B*-309.4 Operation.** Operable parts shall be operable with one hand and shall not require tight grasping, pinching, or twisting of the wrist. The force required to activate operable parts shall be 5 pounds (22.2 N) maximum.

Exception: Gas pump nozzles shall not be required to provide operable parts that have an activating force of 5 pounds (22.2 N) maximum.

11B-401 General

***11B*-401.1 Scope.** The provisions of *Division* 4 shall apply where required by *Division* 2 or where referenced by a requirement in this *chapter*.

11B-402 Accessible routes

***11B*-402.1 General.** Accessible routes shall comply with *Section 11B*-402.

***11B*-402.2 Components.** Accessible routes shall consist of one or more of the following components: walking surfaces with a running slope not steeper than 1:20, doorways, ramps, curb ramps excluding the flared sides, elevators, and platform lifts. All components of an accessible route shall comply with the applicable requirements of *Division* 4.

USDOJ

Advisory 11B-402.2 Components. Walking surfaces must have running slopes not steeper than 1:20, see Section 11B-403.3. Other components of accessible routes, such as ramps (Section 11B-405) and curb ramps (Section 11B-406), are permitted to be more steeply sloped. ■

11B-403 Walking surfaces

***11B*-403.1 General.** Walking surfaces that are a part of an accessible route shall comply with *Section 11B*-403.

***11B*-403.2 Floor or ground surface.** Floor or ground surfaces shall comply with *Section 11B*-302.

***11B*-403.3 Slope.** The running slope of walking surfaces shall not be steeper than 1:20. The cross slope of walking surfaces shall not be steeper than 1:48.

Exception: *The running slope of sidewalks shall not exceed the general grade established for the adjacent street or highway.*

DSA

Advisory 11B-403.3 Slope. There is an important distinction between a “sidewalk” and a “walk”, and they are treated differently under the California Building Code. A sidewalk is contiguous to a street while a walk is not.

When the running slope of a walking surface exceeds 5%, it must comply with the accessibility requirements for ramps.

A sloping sidewalk with a running slope in excess of 5% is excluded from ramp requirements for landings and handrails but it must comply with cross-slope and width requirements. ■

***11B*-403.4 Changes in level.** Changes in level shall comply with *Section 11B*-303.

***11B*-403.5 Clearances.** Walking surfaces shall provide clearances complying with *Section 11B*-403.5.

Exception: Within employee work areas, clearances on common use circulation paths shall be permitted to be decreased by work area equipment provided that the decrease is essential to the function of the work being performed.

***11B*-403.5.1 Clear width.** Except as provided in *Sections 11B*-403.5.2 and *11B*-403.5.3, the clear width of walking surfaces shall be 36 inches (*914* mm) minimum.

Exceptions:

1. The clear width shall be permitted to be reduced to 32 inches (*813* mm) minimum for a length of 24 inches (610 mm) maximum provided that reduced width segments are separated by segments that are 48 inches (*1219* mm) long minimum and 36 inches (*914* mm) wide minimum.

2. *The clear width for walking surfaces in corridors serving an occupant load of 10 or more shall be 44 inches (1118 mm) minimum.*

3. *The clear width for sidewalks and walks shall be 48 inches (1219 mm) minimum. When, because of right-of-way restrictions, natural barriers or other existing conditions, the enforcing agency determines that compliance with the 48-inch (1219 mm) clear sidewalk width would create an unreasonable hardship, the clear width may be reduced to 36 inches (914 mm).*

4. *The clear width for aisles shall be 36 inches (914 mm) minimum if serving elements on only one side, and 44 inches (1118 mm) minimum if serving elements on both sides.*

5. *The clear width for accessible routes to accessible toilet compartments shall be 44 inches (1118 mm) except for door-opening widths and door swings.*

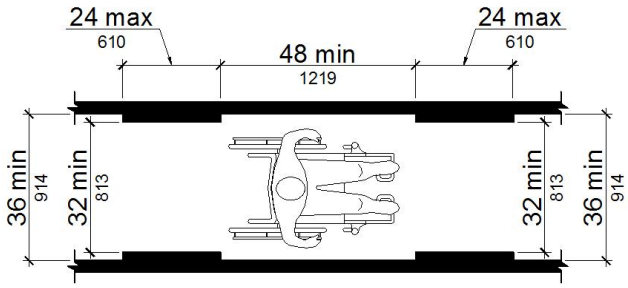

Figure *11B*-403.5.1
Clear Width of an Accessible Route

***11B*-403.5.2 Clear width at turn.** Where the accessible route makes a 180 degree turn around an element which is less than 48 inches (*1219* mm) wide, clear width shall be 42 inches (*1067* mm) minimum approaching the turn, 48 inches (*1219* mm) minimum at the turn and 42 inches (*1067* mm) minimum leaving the turn.

Exception: Where the clear width at the turn is 60 inches (*1524* mm) minimum compliance with *Section 11B*-403.5.2 shall not be required.

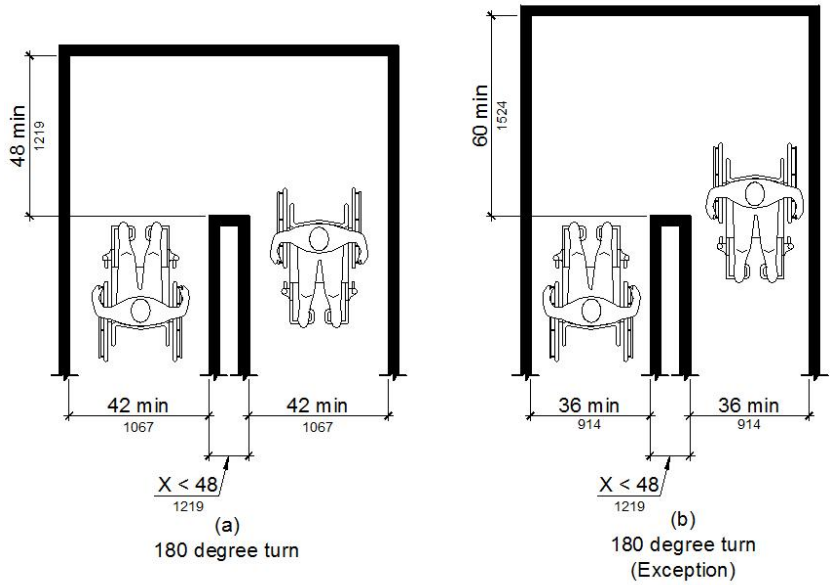

Figure *11B*-403.5.2
Clear Width at Turn

***11B*-403.5.3 Passing spaces.** An accessible route with a clear width less than 60 inches (*1524* mm) shall provide passing spaces at intervals of 200 feet (*60 960 mm*) maximum. Passing spaces shall be either: a space 60 inches (*1524* mm) minimum by 60 inches (*1524* mm) minimum; or, an intersection of two walking surfaces providing a T-shaped space complying with *Section 11B*-304.3.2 where the base and arms of the T-shaped space extend 48 inches (*1219* mm) minimum beyond the intersection.

***11B*-403.6 Handrails.** Where handrails are provided along walking surfaces with running slopes not steeper than 1:20 they shall comply with *Section 11B*-505.

USDOJ

Advisory 11B-403.6 Handrails. Handrails provided in elevator cabs and platform lifts, referred to as support rails in the California Building Code, are not required to comply with the requirements for handrails on walking surfaces. ■

11B-403.7 Continuous gradient. *All walks with continuous gradients shall have resting areas, 60 inches (1524 mm) in length, at intervals of 400 feet (121 920 mm) maximum. The resting area shall be at least as wide as the walk. The slope of the resting area in all directions shall be 1:48 maximum.*

***11B*-404 Doors, doorways, and gates**

***11B*-404.1 General.** Doors, doorways, and gates that are part of an accessible route shall comply with *Section 11B*-404.

Exceptions:

1. Doors, doorways, and gates designed to be operated only by security personnel shall not be required to comply with *Sections 11B*-404.2.7, *11B*-404.2.8, *11B*-404.2.9, *11B*-404.3.2 and *11B*-404.3.4 through *11B*-404.3.7. *A sign visible from the approach side complying with Section 11B-703.5 shall be posted stating "Entry restricted and controlled by security personnel".*

2. *At detention and correctional facilities, doors, doorways, and gates designed to be operated only by security personnel shall not be required to comply with Sections 11B-404.2.7, 11B-404.2.8, 11B-404.2.9, 11B-404.3.2 and 11B-404.3.4 through 11B-404.3.7.*

USDOJ

Advisory 11B-404.1 General Exceptions 1 and 2. Security personnel must have sole control of doors that are eligible for the Exceptions 1 and 2 at Section 11B-404.1. It would not be acceptable for security personnel to operate the doors for people with disabilities while allowing others to have independent access. ■

***11B*-404.2 Manual doors, doorways, and manual gates.** Manual doors and doorways and manual gates intended for user passage shall comply with *Section 11B*-404.2.

***11B*-404.2.1 Revolving doors, gates, and turnstiles.** Revolving doors, revolving gates, and turnstiles shall not be part of an accessible route.

***11B*-404.2.2 Double-leaf doors and gates.** At least one of the active leaves of doorways with two leaves shall comply with *Sections 11B*-404.2.3 and *11B*-404.2.4.

***11B*-404.2.3 Clear width.** Door openings shall provide a clear width of 32 inches (*813* mm) minimum. Clear openings of doorways with swinging doors shall be measured between the face of the door and the stop, with the door open 90 degrees. Openings more than 24 inches (610 mm) deep shall provide a clear opening of 36 inches (*914* mm) minimum. There shall be no projections into the required clear opening width lower than 34 inches (*864* mm) above the finish floor or ground. Projections into the clear opening width between 34 inches (*864* mm) and 80 inches (*2032* mm) above the finish floor or ground shall not exceed 4 inches (*102* mm).

Exceptions:

1. In alterations, a projection of 5/8 inch (*15.9* mm) maximum into the required clear width shall be permitted for the latch side stop.

2. Door closers and door stops shall be permitted to be 78 inches (*1981* mm) minimum above the finish floor or ground.

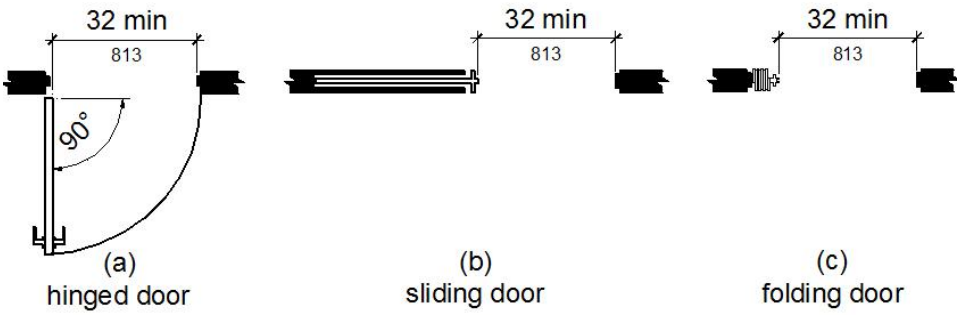

Figure *11B*-404.2.3
Clear Width of Doorways

***11B*-404.2.4 Maneuvering clearances.** Minimum maneuvering clearances at doors and gates shall comply with *Section 11B*-404.2.4. Maneuvering clearances shall extend the full width of the doorway and the required latch side or hinge side clearance.

Exception: ***Reserved.***

***11B*-404.2.4.1 Swinging doors and gates.** Swinging doors and gates shall have maneuvering clearances complying with Table *11B*-404.2.4.1.

Table *11B*-404.2.4.1 Maneuvering Clearances at Manual Swinging Doors and Gates

Type of Use		Minimum Maneuvering Clearance	
Approach Direction	**Door or Gate Side**	**Perpendicular to Doorway**	**Parallel to Doorway (beyond latch side unless noted)**
From front	Pull	60 inches (*1524* mm)	18 inches (*457* mm)[5]
From front	Push	48 inches (*1219* mm)	0 inches (0 mm)[1]
From hinge side	Pull	60 inches (*1524* mm)	36 inches (*914* mm)
From hinge side	Push	*44 inches (1118 mm)*[2]	22 inches (*559* mm)[3]
From latch side	Pull	*60 inches (1524 mm)*	24 inches (610 mm)
From latch side	Push	*44 inches (1118 mm)*[4]	24 inches (610 mm)

1. Add 12 inches (305 mm) if closer and latch are provided.
2. Add *4 inches (102 mm)* if closer and latch are provided.
3. Beyond hinge side.
4. Add *4 inches (102 mm)* if closer is provided.
5. *Add 6 inches (152 mm) at exterior side of exterior doors.*

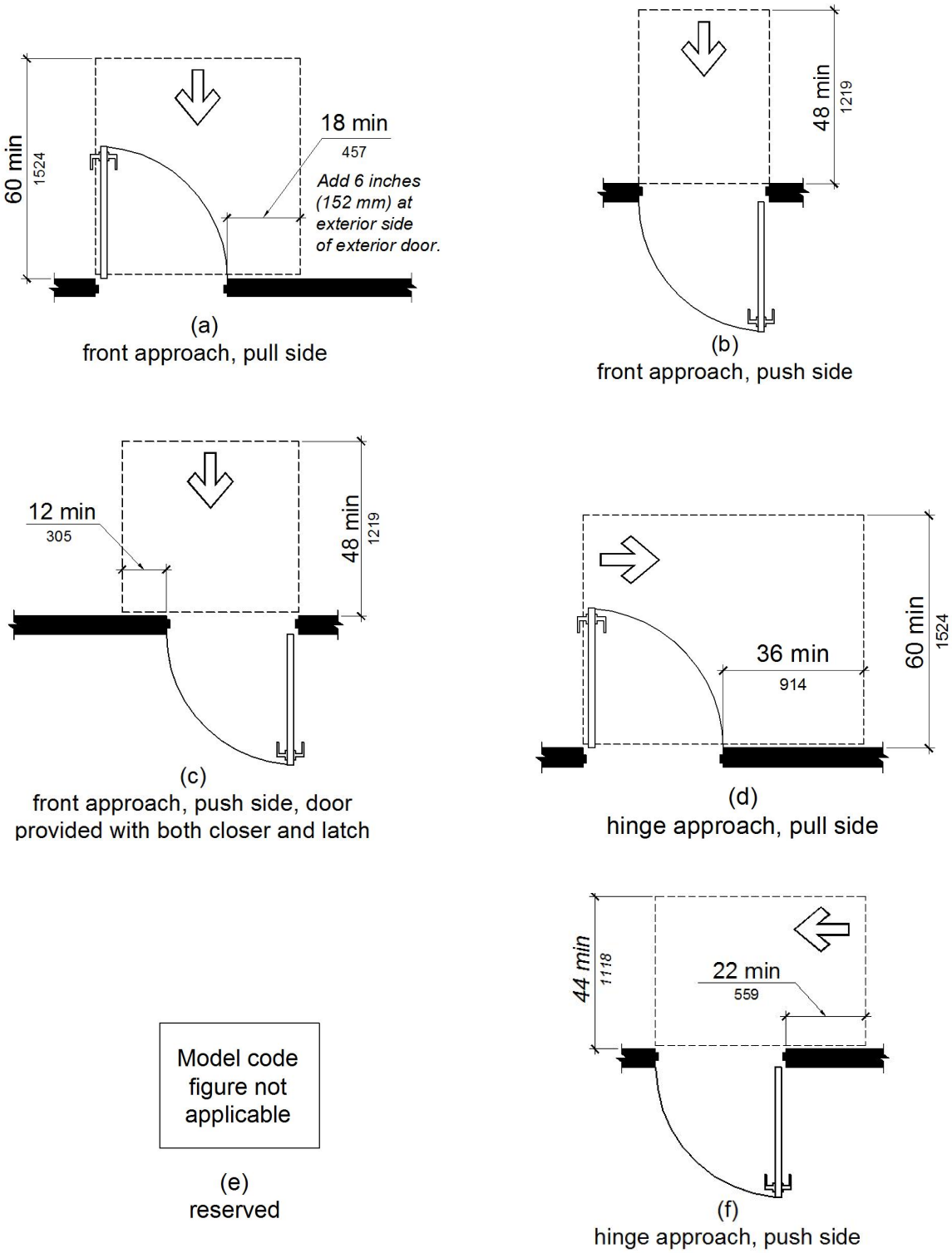

Figure *11B*-404.2.4.1
Maneuvering Clearances at Manual Swinging Doors and Gates

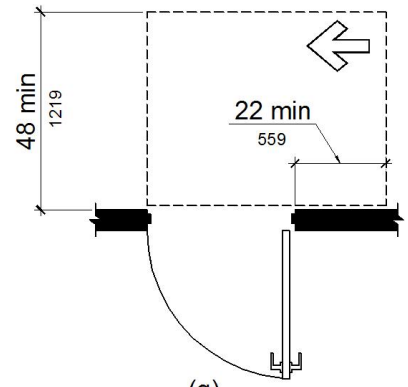

(g)
hinge approach, push side, door provided with both closer and latch

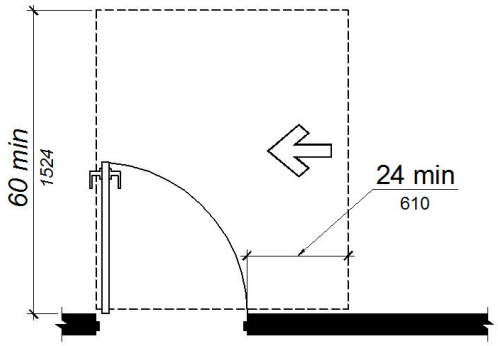

(h)
latch approach, pull side

Model code figure not applicable

(i)
reserved

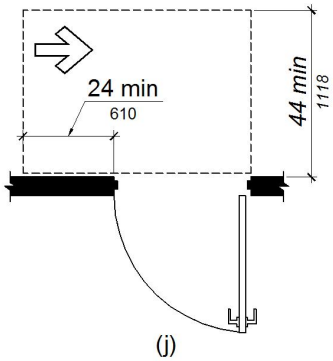

(j)
latch approach, push side

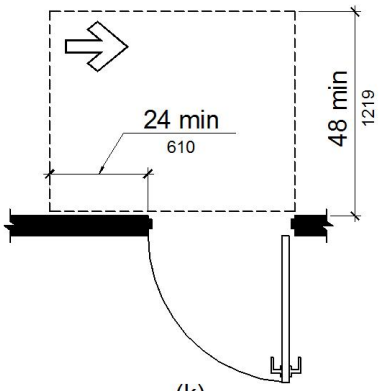

(k)
latch approach, push side, door provided with closer

Figure *11B*-404.2.4.1
Maneuvering Clearances at Manual Swinging Doors and Gates

***11B*-404.2.4.2 Doorways without doors or gates, sliding doors, and folding doors.** Doorways less than 36 inches (*914* mm) wide without doors or gates, sliding doors, or folding doors shall have maneuvering clearances complying with Table *11B*-404.2.4.2.

Table *11B*-404.2.4.2 Maneuvering Clearances at Doorways without Doors or Gates, Manual Sliding Doors, and Manual Folding Doors

	Minimum Maneuvering Clearance	
Approach Direction	**Perpendicular to Doorway**	**Parallel to Doorway (beyond stop/latch side unless noted)**
From front	48 inches (*1219* mm)	0 inches (0 mm)
From side[1]	42 inches (*1067* mm)	0 inches (0 mm)
From pocket/hinge side	42 inches (*1067* mm)	22 inches (*559* mm)[2]
From stop/latch side	42 inches (*1067* mm)	24 inches (610 mm)
1. Doorway with no door only. 2. Beyond pocket/hinge side.		

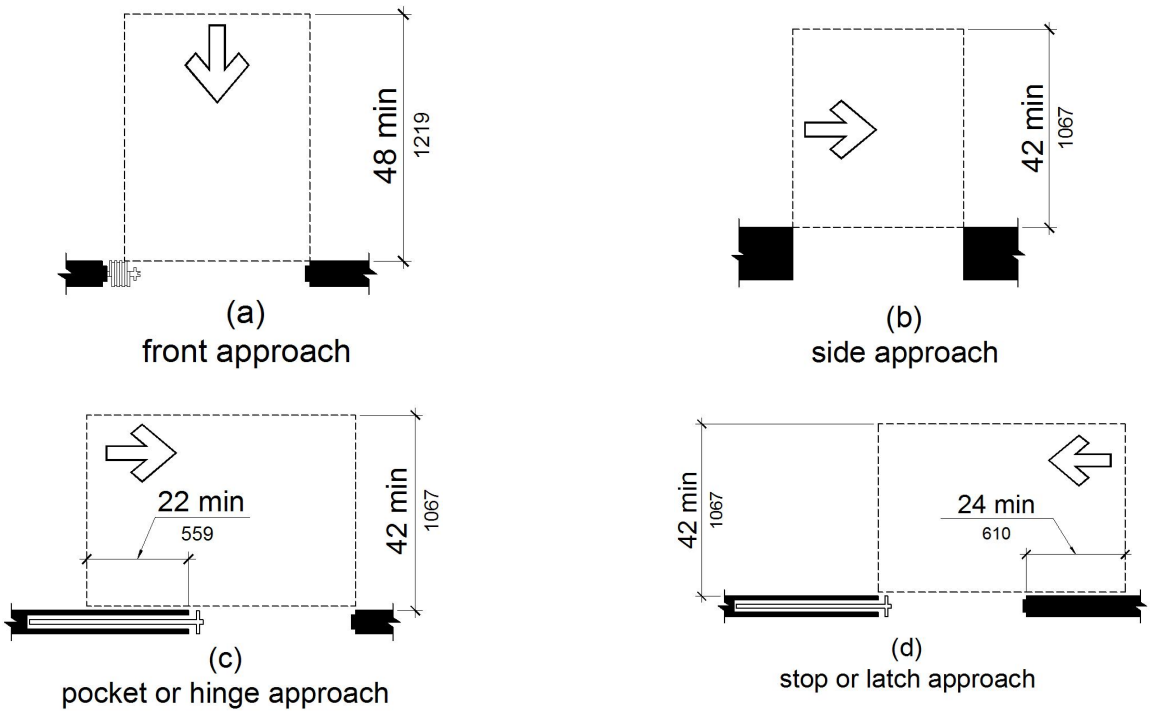

Figure *11B*-404.2.4.2
Maneuvering Clearances at Doorways without Doors, Sliding Doors, Gates, and Folding Doors

***11B*-404.2.4.3 Recessed doors and gates.** Maneuvering clearances for forward approach shall be provided when any obstruction within 18 inches (*457* mm) of the latch side at *an interior* doorway*, or within 24 inches (610 mm) of the latch side of an exterior doorway,* projects more than 8 inches (*203* mm) beyond the face of the door, measured perpendicular to the face of the door or gate.

Advisory 11B-404.2.4.3 Recessed doors and gates. A door can be recessed due to wall thickness or because of the placement of casework and other fixed elements adjacent to the doorway. This provision must be applied wherever doors are recessed. ■

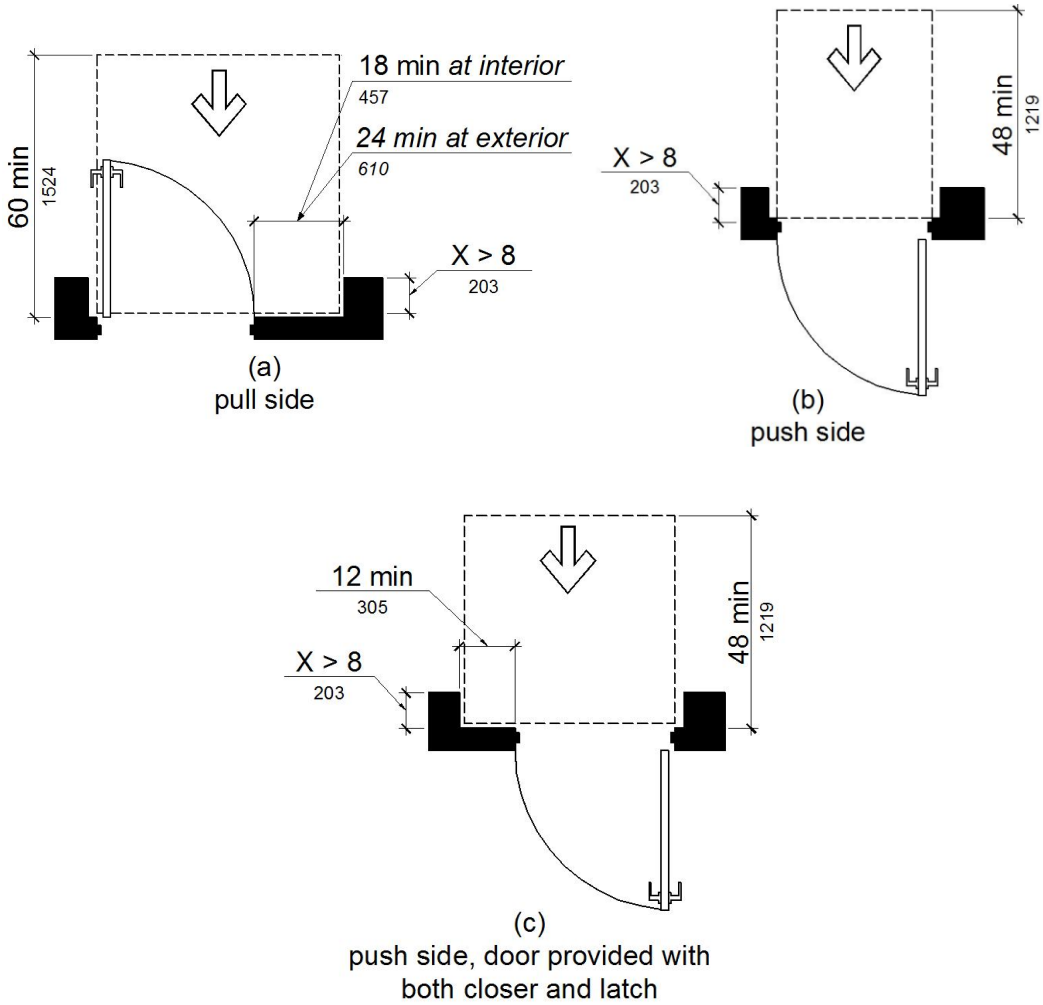

Figure *11B*-404.2.4.3
Maneuvering Clearances at Recessed Doors and Gates

***11B*-404.2.4.4 Floor or ground surface.** Floor or ground surface within required maneuvering clearances shall comply with *Section 11B*-302. Changes in level are not permitted.

Exceptions:

1. Slopes not steeper than 1:48 shall be permitted.

2. Changes in level at thresholds complying with *Section 11B*-404.2.5 shall be permitted.

***11B*-404.2.5 Thresholds.** Thresholds, if provided at doorways, shall be ½ inch (*12.7* mm) high maximum. Raised thresholds and changes in level at doorways shall comply with *Sections 11B*-302 and *11B*-303.

Exception: ***Reserved.***

***11B*-404.2.6 Doors in series and gates in series.** The distance between two hinged or pivoted doors in series and gates in series shall be 48 inches (1219 mm) minimum plus the width of doors or gates swinging into the space.

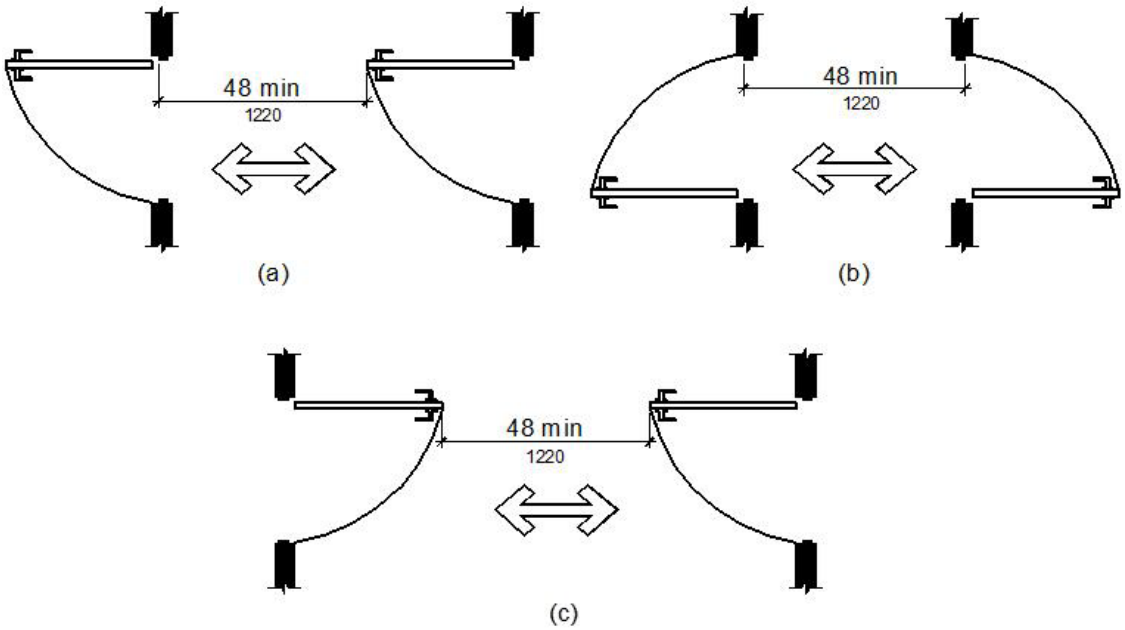

Figure *11B*-404.2.6
Doors in Series and Gates in Series

***11B*-404.2.7 Door and gate hardware.** Handles, pulls, latches, locks, and other operable parts on doors and gates shall comply with *Section 11B*-309.4. Operable parts of such hardware shall be 34 inches (*864* mm) minimum and *44 inches (1118 mm)* maximum above the finish floor or ground. Where sliding doors are in the fully open position, operating hardware shall be exposed and usable from both sides.

Exceptions:

1. Existing locks shall be permitted in any location at existing glazed doors without stiles, existing overhead rolling doors or grilles, and similar existing doors or grilles that are designed with locks that are activated only at the top or bottom rail.

2. Access gates in barrier walls and fences protecting pools, spas, and hot tubs shall be permitted to have operable parts of the release of latch on self-latching devices at 54 inches (*1372* mm) maximum above the finish floor or ground provided the self-latching devices are not also self-locking devices and operated by means of a key, electronic opener, or integral combination lock.

USDOJ

Advisory 11B-404.2.7 Door and gate hardware. Door hardware that can be operated with a closed fist or a loose grip accommodates the greatest range of users. Hardware that requires simultaneous hand and finger movements require greater dexterity and coordination, and is not recommended. ■

DSA

Advisory 11B-404.2.7 Door and gate hardware. In addition to the requirements of this section, designers should be aware of the Part 12, Section 12-10-202(f) requirement for lever hardware as adopted by the State Fire Marshal. The lever of lever actuated latches or locks must be curved with a return to within ½ inch of the door to prevent catching on the clothing of persons during egress. ■

***11B*-404.2.8 Closing speed.** Door and gate closing speed shall comply with *Section 11B*-404.2.8.

***11B*-404.2.8.1 Door closers and gate closers.** Door closers and gate closers shall be adjusted so that from an open position of 90 degrees, the time required to move the door to a position of 12 degrees from the latch is 5 seconds minimum.

***11B*-404.2.8.2 Spring hinges.** Door and gate spring hinges shall be adjusted so that from the open position of 70 degrees, the door or gate shall move to the closed position in 1.5 seconds minimum.

***11B*-404.2.9 Door and gate opening force.** The force for pushing or pulling open a door or gate shall be as follows:

1. Interior hinged doors and gates: 5 pounds (22.2 N) maximum.

2. Sliding or folding doors: 5 pounds (22.2 N) maximum.

3. *Required fire doors: the minimum opening force allowable by the appropriate administrative authority, not to exceed 15 pounds (66.7 N).*

4. *Exterior hinged doors: 5 pounds (22.2 N) maximum.*

These forces do not apply to the force required to retract latch bolts or disengage other devices that hold the door or gate in a closed position.

Exceptions:

1. *Exterior doors to machinery spaces including, but not limited to, elevator pits or elevator penthouses; mechanical, electrical or communications equipment rooms; piping or equipment catwalks; electric substations and transformer vaults; and highway and tunnel utility facilities*.

2. *When, at a single location, one of every eight exterior door leafs, or fraction of eight, is a powered door, other exterior doors at the same location, serving the same interior space, may have a maximum opening force of 8.5 pounds (37.8 N). The powered leaf(s) shall be located closest to the accessible route.*

   a. *Powered doors shall comply with Section 11B-404.3. Powered doors shall be fully automatic doors complying with Builders Hardware Manufacturers' Association (BHMA) A156.10 or low energy operated doors complying with BHMA A156.19.*

   b. *Powered doors serving a building or facility with an occupancy of 150 or more shall be provided with a back-up battery or back-up generator. The back-up power source shall be able to cycle the door a minimum of 100 cycles.*

   c. *Powered doors shall be controlled on both the interior and exterior sides of the doors by sensing devices, push plates, vertical actuation bars or other similar operating devices complying with Sections 11B-304, 11B-305 and 11B-308.*

At each location where push plates are provided there shall be two push plates; the centerline of one push plate shall be 7 inches (178 mm) minimum and 8 inches (203 mm) maximum above the floor or ground surface and the centerline of the second push plate shall be 30 inches (762 mm) minimum and 44 inches (1118 mm) maximum above the floor or ground surface. Each push plate shall be a minimum of 4 inches (102 mm) diameter or a minimum of 4 inches by 4 inches (102 mm by 102 mm) square and shall display the International Symbol of Accessibility complying with Section 11B-703.7.

At each location where vertical actuation bars are provided the operable portion shall be located so the bottom is 5 inches (127 mm) maximum above the floor or ground surface and the top is 35 inches (889 mm) minimum above the floor or ground surface. The operable portion of each vertical actuation bar shall be a minimum of 2 inches (51 mm) wide and shall display the International Symbol of Accessibility complying with Section 11B-703.7.

Where push plates, vertical actuation bars or other similar operating devices are provided, they shall be placed in a conspicuous location. A level and clear floor or ground space for forward or parallel approach complying with Section 11B-305 shall be provided, centered on the operating device. Doors shall not swing into the required clear floor or ground space.

d. *Signage identifying the accessible entrance required by Section 11B-216.6 shall be placed on, or immediately adjacent to, each powered door. Signage shall be provided in compliance with BHMA A156.10 or BHMA 156.19, as applicable.*

e. *In addition to the requirements of Item d, where a powered door is provided in buildings or facilities containing assembly occupancies of 300 or more, a sign displaying the International Symbol of Accessibility measuring 6 inches by 6 inches (152 mm by 152 mm), complying with Section 11B-703.7, shall be provided above the door on both the interior and exterior sides of each powered door.*

USDOJ

Advisory 11B-404.2.9 Door and gate opening force. The maximum force pertains to the continuous application of force necessary to fully open a door, not the initial force needed to overcome the inertia of the door. It does not apply to the force required to retract bolts or to disengage other devices used to keep the door in a closed position. ■

***11B*-404.2.10 Door and gate surfaces.** Swinging door and gate surfaces within 10 inches (*254* mm) of the finish floor or ground measured vertically shall have a smooth surface on the push side extending the full width of the door or gate. Parts creating horizontal or vertical joints in these surfaces shall be within 1/16 inch (1.6 mm) of the same plane as the other *and be free of sharp or abrasive edges*. Cavities created by added kick plates shall be capped.

Exceptions:

1. Sliding doors shall not be required to comply with *Section 11B*-404.2.10.

2. Tempered glass doors without stiles and having a bottom rail or shoe with the top leading edge tapered at 60 degrees minimum from the horizontal shall not be required to meet the 10 inch (*254* mm) bottom smooth surface height requirement.

3. Doors and gates that do not extend to within 10 inches (*254* mm) of the finish floor or ground shall not be required to comply with *Section 11B*-404.2.10.

4. ***Reserved.***

***11B*-404.2.11 Vision lights.** Doors, gates, and side lights adjacent to doors or gates, containing one or more glazing panels that permit viewing through the panels shall have the bottom of at least one glazed panel located 43 inches (*1092* mm) maximum above the finish floor.

Exception: *Glazing panels* with the lowest part more than 66 inches (*1676* mm) from the finish floor or ground shall not be required to comply with *Section 11B*-404.2.11.

***11B*-404.3 Automatic and power-assisted doors and gates.** Automatic doors and automatic gates shall comply with *Section 11B*-404.3. Full-powered automatic doors shall comply with ANSI/BHMA A156.10. Low-energy and power-assisted doors shall comply with ANSI/BHMA A156.19.

DSA

Advisory 11B-404.3 Automatic and power-assisted doors and gates. Automatic and power-assisted doors are often used by designers to provide accessibility when door closer pressure would exceed the allowable opening force for interior or exterior doors. Heavy doors are difficult to open for persons using wheelchairs because holding the door open with one hand requires the user to let go of one wheel – not enough control remains to prevent the chair from twisting out of the intended direction. An automatic door may be used as equivalent facilitation when it is technically infeasible to provide sufficient strike-side clearance for code compliance, but a power-assisted door may not. ■

***11B*-404.3.1 Clear width.** Doorways shall provide a clear opening of 32 inches (*813* mm) minimum in power-on and power-off mode. The minimum clear width for automatic door systems in a doorway *shall provide a clear, unobstructed opening of 32 inches (813 mm) with one leaf positioned at an angle of 90 degrees from its closed position.*

***11B*-404.3.2 Maneuvering clearance.** Clearances at power-assisted doors and gates shall comply with *Section 11B*-404.2.4. Clearances at automatic doors and gates without standby power and serving an accessible means of egress shall comply with *Section 11B*-404.2.4.

Exception: Where automatic doors and gates remain open in the power-off condition, compliance with *Section 11B*-404.2.4 shall not be required.

***11B*-404.3.3 Thresholds.** Thresholds and changes in level at doorways shall comply with *Section 11B*-404.2.5.

***11B*-404.3.4 Doors in series and gates in series.** Doors in series and gates in series shall comply with *Section 11B*-404.2.6.

***11B*-404.3.5 Controls.** Manually operated controls shall comply with *Section 11B*-309. The clear floor space adjacent to the control shall be located beyond the arc of the door swing.

DSA

Advisory 11B-404.3.5 Controls. Where push plates, vertical actuation bars or other similar operating devices are provided, they shall be placed in a conspicuous location. A level and clear floor or ground space for forward or parallel approach complying with Section 11B-305 should be provided, centered on the operating device. Doors should not swing into the required clear floor or ground space for the operating device. ■

***11B*-404.3.6 Break out opening.** Where doors and gates without standby power are a part of a means of egress, the clear break out opening at swinging or sliding doors and gates shall be 32 inches (*813* mm) minimum when operated in emergency mode.

Exception: Where manual swinging doors and gates comply with *Section 11B*-404.2 and serve the same means of egress compliance with *Section 11B*-404.3.6 shall not be required.

***11B*-404.3.7 Revolving doors, revolving gates, and turnstiles.** Revolving doors, revolving gates, and turnstiles shall not be part of an accessible route.

***11B*-405 Ramps**

***11B*-405.1 General.** Ramps on accessible routes shall comply with *Section 11B*-405.

Exception: In assembly areas, aisle ramps adjacent to seating and not serving elements required to be on an accessible route shall not be required to comply with *Section 11B*-405.

***11B*-405.2 Slope.** Ramp runs shall have a running slope not steeper than 1:12.

Exception: ***Reserved.***

USDOJ

Advisory 11B-405.2 Slope. To accommodate the widest range of users, provide ramps with the least possible running slope and, wherever possible, accompany ramps with stairs for use by those individuals for whom distance presents a greater barrier than steps, e.g., people with heart disease or limited stamina. ■

***11B*-405.3 Cross slope.** Cross slope of ramp runs shall not be steeper than 1:48.

USDOJ

Advisory 11B-405.3 Cross slope. Cross slope is the slope of the surface perpendicular to the direction of travel. Cross slope is measured the same way as slope is measured (i.e., the rise over the run). ■

DSA

Advisory 11B-405.3 Cross slope. Curved ramps are not prohibited by Chapter 11B; however, requirements for maximum slope and cross-slope cannot be exceeded. ■

***11B*-405.4 Floor or ground surfaces.** Floor or ground surfaces of ramp runs shall comply with *Section 11B*-302. Changes in level other than the running slope and cross slope are not permitted on ramp runs.

***11B*-405.5 Clear width.** The clear width of a ramp run *shall be 48 inches (1219 mm)* minimum.

Exceptions:

1. Within employee work areas, the required clear width of ramps that are a part of common use circulation paths shall be permitted to be decreased by work area equipment provided that the decrease is essential to the function of the work being performed.

2. *Handrails may project into the required clear width of the ramp at each side 3 ½ inches (89 mm) maximum at the handrail height.*

3. *The clear width of ramps in residential uses serving an occupant load of fifty or less shall be 36 inches (914 mm) minimum between handrails.*

***11B*-405.6 Rise.** The rise for any ramp run shall be 30 inches (*762* mm) maximum.

***11B*-405.7 Landings.** Ramps shall have landings at the top and the bottom of each ramp run. Landings shall comply with *Section 11B*-405.7.

USDOJ

Advisory 11B-405.7 Landings. Ramps that do not have level landings at changes in direction can create a compound slope that will not meet the requirements of this chapter. Circular or curved ramps continually change direction. Curvilinear ramps with small radii also can create compound cross slopes and cannot, by their nature, meet the requirements for accessible routes. A level landing is needed at the accessible door to permit maneuvering and simultaneously door operation. ■

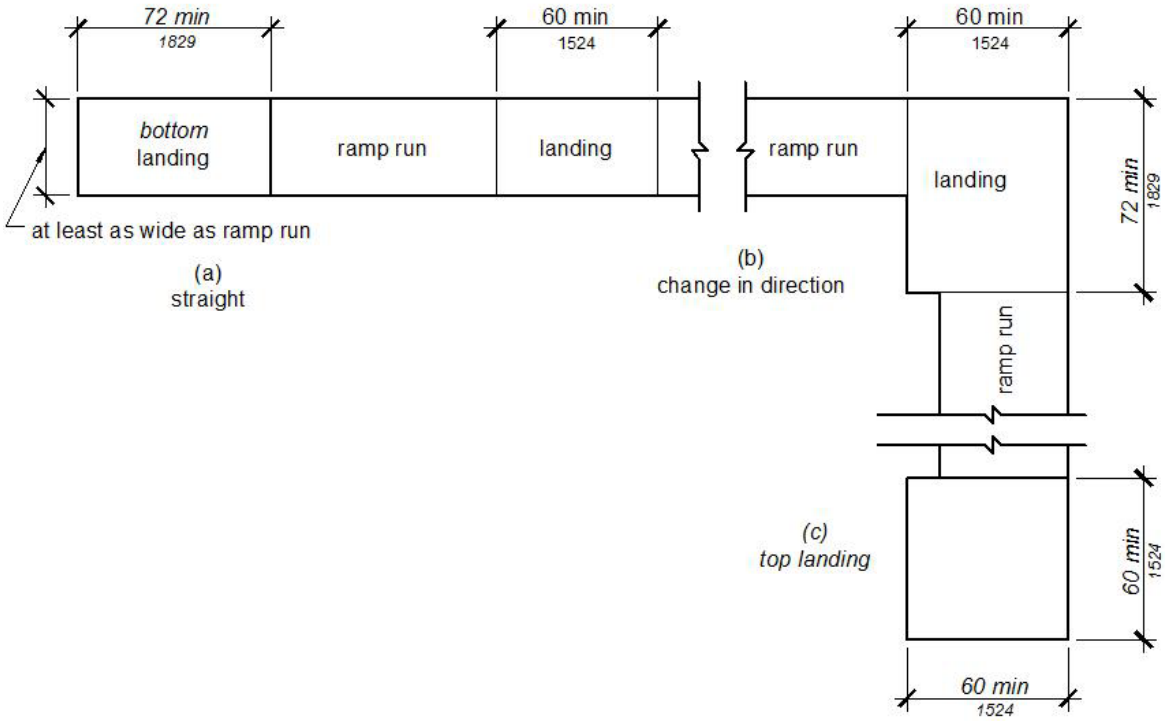

Figure *11B*-405.7
Ramp Landings

***11B*-405.7.1 Slope.** Landings shall comply with *Section 11B*-302. Changes in level are not permitted.

Exception: Slopes not steeper than 1:48 shall be permitted.

***11B*-405.7.2 Width.** The landing clear width shall be at least as wide as the widest ramp run leading to the landing.

11B-405.7.2.1: *Top landings shall be 60 inches (1524 mm) wide minimum.*

***11B*-405.7.3 Length.** The landing clear length shall be 60 inches (*1524* mm) long minimum.

11B-405.7.3.1: *Bottom landings shall extend 72 inches (1829 mm) minimum in the direction of ramp run.*

***11B*-405.7.4 Change in direction.** Ramps that change direction between runs at landings shall have a clear landing 60 inches (1525 mm) minimum by *72 inches (1829 mm)* minimum *in the direction of downward travel from the upper ramp run*.

***11B*-405.7.5 Doorways.** Where doorways are located adjacent to a ramp landing, maneuvering clearances required by *Sections 11B*-404.2.4 and *11B*-404.3.2 shall be permitted to overlap the required landing area. *Doors, when fully open, shall not reduce the required ramp landing width by more than 3 inches (76 mm). Doors, in any position, shall not reduce the minimum dimension of the ramp landing to less than 42 inches (1067 mm).*

***11B*-405.8 Handrails.** Ramp runs shall have handrails complying with *Section 11B*-505.

Exceptions:

1. ***Reserved.***
2. ***Reserved.***
3. *Curb ramps do not require handrails*.
4. *At door landings, handrails are not required on ramp runs less than 6 inches (152 mm) in rise or 72 inches (1829 mm) in length.*

***11B*-405.9 Edge protection.** Edge protection complying with *Section 11B*-405.9.2 shall be provided on each side of ramp runs and at each side of ramp landings.

Exceptions:

1. Edge protection shall not be required on ramps that are not required to have handrails and have sides complying with *Section 11B*-406.2.2.
2. Edge protection shall not be required on the sides of ramp landings serving an adjoining ramp run or stairway.
3. Edge protection shall not be required on the sides of ramp landings having a vertical drop-off of ½ inch (*12.7* mm) maximum within 10 inches (*254* mm) horizontally of the minimum landing area specified in *Section 11B*-405.7.

11B*-405.9.1 *Reserved.

***11B*-405.9.2 Curb or barrier.** A curb, *2 inches (51 mm) high minimum,* or barrier shall be provided that prevents the passage of a 4 inch (*102* mm) diameter sphere, where any portion of the sphere is within 4 inches (*102* mm) of the finish floor or ground surface. *To prevent wheel entrapment, the curb or barrier shall provide a continuous and uninterrupted barrier along the length of the ramp.*

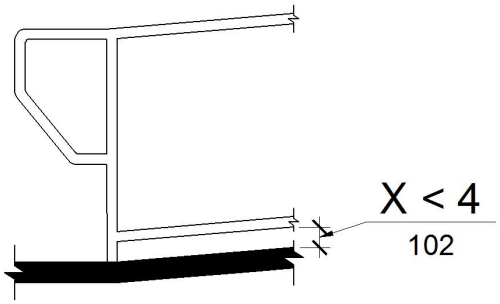

Figure *11B*-405.9.2
Curb or Barrier Edge Protection

***11B*-405.10 Wet conditions.** Landings subject to wet conditions shall be designed to prevent the accumulation of water.

11B*-406 *Curb ramps, blended transitions and islands

11B-406.1 General. *Curb ramps, blended transitions and islands on accessible routes shall comply with Section 11B-406. Curb ramps may be perpendicular, parallel, or a combination of perpendicular and parallel.*

11B-406.1.1 Perpendicular curb ramps. *Perpendicular curb ramps shall comply with Section 11B-406.2.*

11B-406.1.2 Parallel curb ramps. *Parallel curb ramps shall comply with Section 11B-406.3.*

11B-406.1.3 Blended transitions. *Blended transitions shall comply with Section 11B-406.4.*

11B-406.1.4 Islands. *Islands shall comply with Section 11B-406.6.*

11B-406.2 Perpendicular curb ramps. *Perpendicular curb ramps shall comply with Sections 11B-406.2 and 11B-406.5.*

11B-406.2.1 Slope. *Ramp runs shall have a running slope not steeper than 1:12.*

11B-406.2.2 Sides of curb ramps. *Where provided, curb ramp flares shall not be steeper than 1:10.*

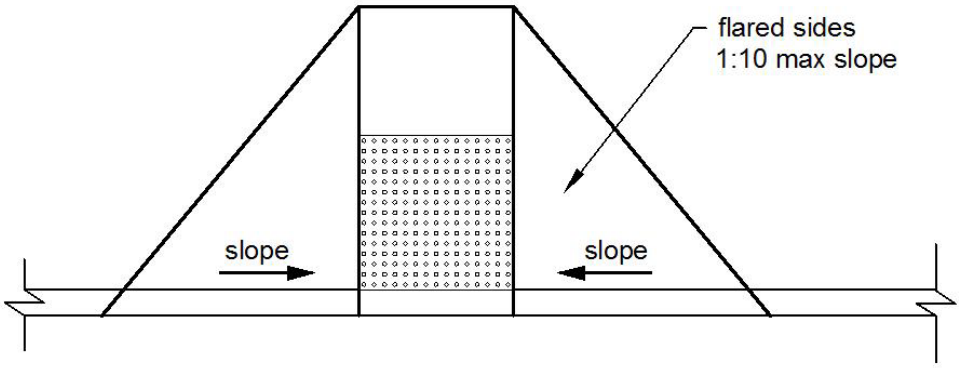

Figure *11B-406.2.2*
Sides of Curb Ramps

11B-406.3 Parallel curb ramps. *Parallel curb ramps shall comply with Sections 11B-406.3 and 11B-*

406.5.

11B-406.3.1 Slope. *The running slope of the curb ramp segments shall be in-line with the direction of sidewalk travel. Ramp runs shall have a running slope not steeper than 1:12.*

11B-406.3.2 Turning space. *A turning space 48 inches (1219 mm) minimum by 48 inches (1219 mm) minimum shall be provided at the bottom of the curb ramp. The slope of the turning space in all directions shall be 1:48 maximum.*

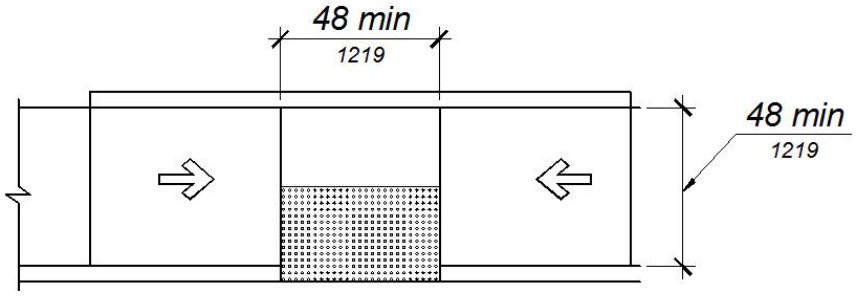

Figure 11B-406.3.2
Parallel Curb Ramps

11B-406.4 Blended transitions. *Blended transitions shall comply with Sections 11B-406.4 and 11B-406.5.*

11B-406.4.1 Slope. *Blended transitions shall have a running slope not steeper than 1:20.*

11B-406.5 Common requirements. *Curb ramps and blended transitions shall comply with Section 11B-406.5.*

11B-406.5.1 Location. *Curb ramps and the flared sides of curb ramps shall be located so that they do not project into vehicular traffic lanes, parking spaces, or parking access aisles. Curb ramps at marked crossings shall be wholly contained within the markings, excluding any flared sides.*

Exception: *Diagonal curb ramps shall comply with Section 11B-406.5.9.*

11B-406.5.2 Width. *The clear width of curb ramp runs (excluding any flared sides), blended transitions, and turning spaces shall be 48 inches (1219 mm) minimum.*

11B-406.5.3 Landings. *Landings shall be provided at the tops of curb ramps and blended transitions. The landing clear length shall be 48 inches (1219 mm) minimum. The landing clear width shall be at least as wide as the curb ramp, excluding any flared sides, or the blended transition leading to the landing. The slope of the landing in all directions shall be 1:48 maximum.*

Exception: *Parallel curb ramps shall not be required to comply with Section 11B-406.5.3.*

DSA

Advisory 11B-406.5.3 Landings. A level landing, 48” deep and at least as wide as the curb ramp, is required at the top of a curb ramp. The landing provides an area for users to exit the curb ramp and proceed along the walking surface at the top of the curb ramp.

Some designs have been proposed that reduce or omit the level top landing by providing a curb ramp with flared sides of 1:12 or less. This design is not compliant with the building code and may result in a condition where a wheelchair user cannot safely turn and proceed along the intersecting walk. Section 11B-403.5.1, Exception 3, requires walks and sidewalks

to be 48” wide minimum; Section 11B-403.3 requires walks and sidewalks to have a cross-slope of 1:48 or less. In this example, reducing or omitting the top landing of the curb ramp may result in a substandard walk width and/or a walk with a cross-slope in excess of 1:48. ■

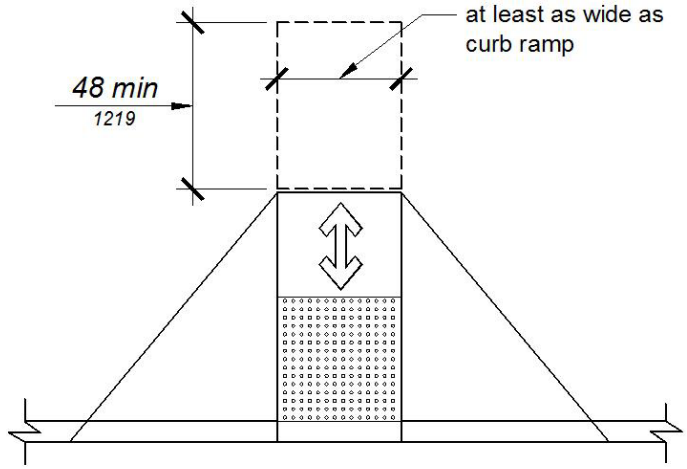

Figure *11B-406.5.3*
Landings at the Top of Curb Ramps

11B-406.5.4 Floor or ground surfaces. *Floor or ground surfaces of curb ramps and blended transitions shall comply with Section 11B-405.4.*

11B-406.5.5 Wet conditions. *Curb ramps and blended transitions shall comply with Section 11B-405.10.*

11B-406.5.6 Grade breaks. *Grade breaks at the top and bottom of curb ramp runs shall be perpendicular to the direction of the ramp run. Grade breaks shall not be permitted on the surface of ramp runs and turning spaces. Surface slopes that meet at grade breaks shall be flush.*

11B-406.5.7 Cross slope. *The cross slope of curb ramps and blended transitions shall be 1:48 maximum.*

11B-406.5.8 Counter slope. *Counter slopes of adjoining gutters and road surfaces immediately adjacent to and within 24 inches (610 mm) of the curb ramp shall not be steeper than 1:20. The adjacent surfaces at transitions at curb ramps to walks, gutters, and streets shall be at the same level.*

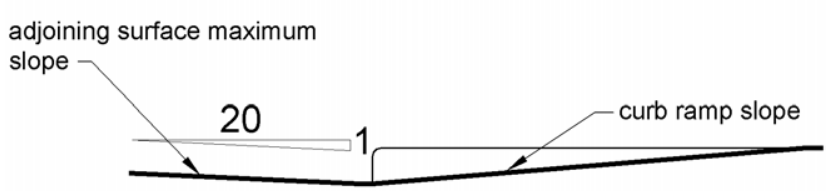

Figure *11B-406.5.8*
Counter Slope of Surfaces Adjacent to Curb Ramps

11B-406.5.9 Clear space at diagonal curb ramps. *The bottom of diagonal curb ramps shall have a clear space 48 inches (1219 mm) minimum outside active traffic lanes of the roadway. Diagonal curb ramps provided at marked crossings shall provide the 48 inches (1219 mm) minimum clear space within the markings.*

11B-406.5.10 Diagonal curb ramps. *Diagonal or corner type curb ramps with returned curbs or other well-defined edges shall have the edges parallel to the direction of pedestrian flow. Diagonal curb ramps with flared sides shall have a segment of curb 24 inches (610 mm) long minimum located on each side of the curb ramp and within the marked crossing.*

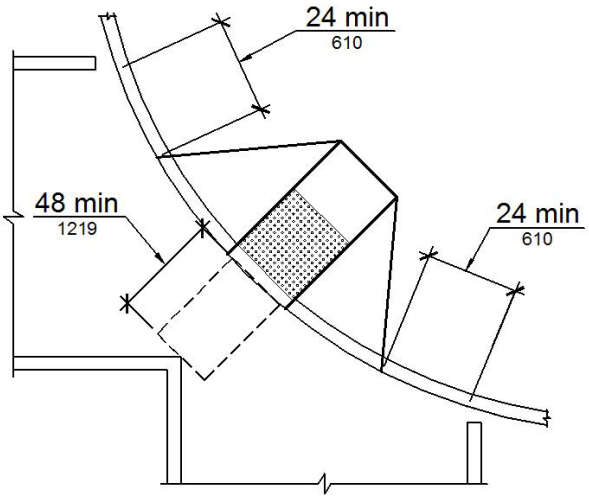

Figure *11B-406.5.10*
Diagonal or Corner Type Curb Ramps

11B-406.5.11 Reserved.

11B-406.5.12 Detectable warnings. *Curb ramps and blended transitions shall have detectable warnings complying with Section 11B-705.*

11B-406.6 Islands. *Raised islands in crossings shall be cut through level with the street or have curb ramps at both sides. The clear width of the accessible route at islands shall be 60 inches (1524 mm) wide minimum. Where curb ramps are provided, they shall comply with Section 11B-406. Landings complying with Section 11B-406.5.3 and the accessible route shall be permitted to overlap. Islands shall have detectable warnings complying with Section 11B-705.*

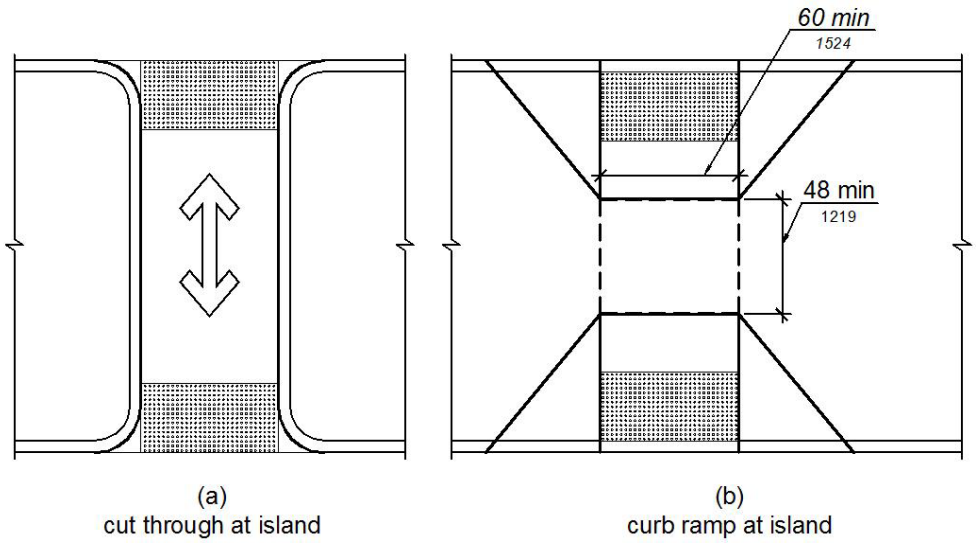

Figure *11B-406.6*
Islands in Crossings

11B-407 Elevators

***11B*-407.1 General.** Elevators shall comply with *Section 11B*-407 and with ASME A17.1. They shall be passenger elevators as classified by ASME A17.1. Elevator operation shall be automatic.

USDOJ

Advisory 11B-407.1 General. The ADA and other Federal civil rights laws require that accessible features be maintained in working order so that they are accessible to and usable by those people they are intended to benefit. Building owners should note that the ASME Safety Code for Elevators and Escalators requires routine maintenance and inspections. Isolated or temporary interruptions in service due to maintenance or repairs may be unavoidable; however, failure to take prompt action to effect repairs could constitute a violation of Federal laws and these requirements. ■

DSA

Advisory 11B-407.1 General. Elevator safety is regulated by the California Department of Occupational Safety and Health, Elevator Ride and Tramway Unit - see Title 8, California Code of Regulations for more information.

DSA regulates the usability of elevators and platform (wheelchair) lifts for persons with disabilities. Accessibility scoping requirements for elevators and lifts are located in Sections 11B-206.6 and 11B-207.6; technical requirements are located in Sections 11B-407, 11B-408, 11B-409 and 11B-410. ■

11B-407.1.1 Combined passenger and freight elevators. *When the only elevators provided for use by the public and employees are combination passenger and freight elevators, they shall comply with Section 11B-407 and with ASME A17.1.*

***11B*-407.2 Elevator landing requirements.** Elevator landings shall comply with *Section 11B*-407.2.

***11B*-407.2.1 Call controls.** Where elevator call buttons or keypads are provided, they shall comply with *Sections 11B*-407.2.1 and *11B*-309.4.

Exception: ***Reserved.***

***11B*-407.2.1.1 Height.** Call buttons and keypads shall be located within one of the reach ranges specified in *Section 11B*-308, measured to the centerline of the highest operable part.

Exception: ***Reserved.***

11B*-407.2.1.2 Size *and shape. Call buttons shall *have square shoulders*, be ¾ inch (*19.1* mm) minimum in the smallest dimension *and shall be raised ⅛ inch (3.2 mm) plus or minus 1/32 inch (0.8 mm) above the surrounding surface. The buttons shall be activated by a mechanical motion that is detectable.*

Exception: ***Reserved.***

***11B*-407.2.1.3 Clear floor or ground space.** A clear floor or ground space complying with *Section 11B*-305 shall be provided at call controls.

USDOJ

Advisory 11B-407.2.1.3 Clear floor or ground space. The clear floor or ground space required at elevator call buttons must remain free of obstructions including ashtrays, plants, and other decorative elements that prevent wheelchair users and others from reaching the call buttons. The height of the clear floor or ground space is considered to be a volume from the floor to 80 inches (2030 mm) above the floor. Recessed ashtrays should not be placed near elevator call buttons so that persons who are blind or visually impaired do not inadvertently contact them or their contents as they reach for the call buttons. ■

***11B*-407.2.1.4 Location.** The call button that designates the up direction shall be located above the call button that designates the down direction.

Exception: ***Reserved.***

USDOJ

Advisory 11B-407.2.1.4 Location Exception. A destination-oriented elevator system provides lobby controls enabling passengers to select floor stops, lobby indicators designating which elevator to use, and a car indicator designating the floors at which the car will stop. Responding cars are programmed for maximum efficiency by reducing the number of stops any passenger experiences. ■

***11B*-407.2.1.5 Signals.** Call buttons shall have visible signals *that will activate* when each call is registered and *will extinguish* when each call is answered. *Call buttons shall be internally illuminated with a white light over the entire surface of the button.*

Exceptions:

1. ***Reserved.***
2. ***Reserved.***

***11B*-407.2.1.6 Keypads.** Where keypads are provided, keypads shall be in a standard telephone keypad arrangement and shall comply with *Section 11B*-407.4.7.2.

***11B*-407.2.2 Hall signals.** Hall signals, including in-car signals, shall comply with *Section 11B*-407.2.2.

***11B*-407.2.2.1 Visible and audible signals.** A visible and audible signal shall be provided at each hoistway entrance to indicate which car is answering a call and the car's direction of travel. Where in-car signals are provided, they shall be visible from the floor area adjacent to the hall call buttons.

Exceptions:

1. ***Reserved.***

2. ***Reserved.***

***11B*-407.2.2.2 Visible signals.** Visible signal fixtures shall be centered at 72 inches (*1829* mm) minimum above the finish floor or ground. The visible signal elements shall be a minimum 2½ inches (64 mm) *high by 2½ inches (64 mm) wide*. Signals shall be visible from the floor area adjacent to the hall call button.

Exceptions:

1. ***Reserved.***

2. ***Reserved.***

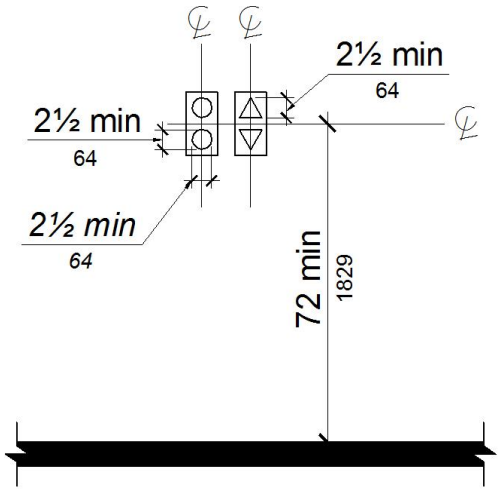

Figure *11B*-407.2.2.2
Visible Hall Signals

***11B*-407.2.2.3 Audible signals.** Audible signals shall sound once for the up direction and twice for the down direction, or shall have verbal annunciators that indicate the direction of elevator car travel. Audible signals shall have a frequency of 1500 Hz maximum. Verbal annunciators shall have a frequency of 300 Hz minimum and 3000 Hz maximum. The audible signal and verbal annunciator shall be 10 dB minimum above ambient, but shall not exceed 80 dB, measured at the hall call button.

Exceptions:

1. ***Reserved.***

2. ***Reserved.***

11B*-407.2.2.4 *Reserved.

***11B*-407.2.3 Hoistway signs.** Signs at elevator hoistways shall comply with *Section 11B*-407.2.3.

***11B*-407.2.3.1 Floor designation.** Floor designations complying with *Sections 11B*-703.2 and *11B*-703.4.1 shall be provided on both jambs of elevator hoistway entrances. Floor designations shall be provided in both *raised* characters and Braille. *Raised* characters shall be 2 inches (51 mm) high. A *raised* star*, placed to the left of the floor designation,* shall be provided on both jambs at the main entry level. *The outside diameter of the star shall be 2 inches (51 mm) and all points shall be of equal length. Raised characters, including the star, shall be white on a black background. Braille complying with Section 11B-703.3 shall be placed below the corresponding raised characters and the star. The Braille translation for the star shall be "MAIN". Applied plates are acceptable if they are permanently fixed to the jamb.*

.

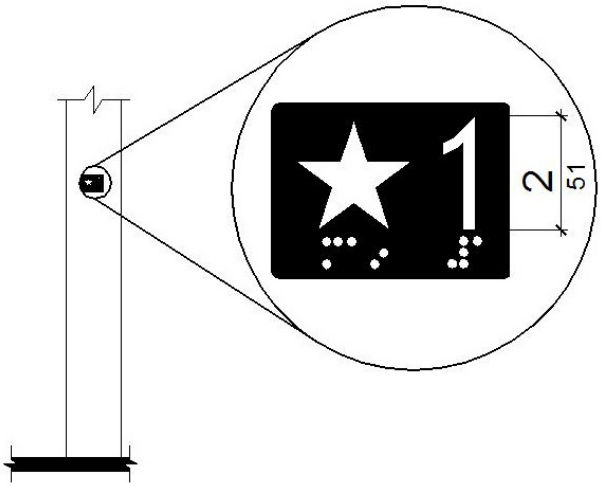

Figure *11B*-407.2.3.1
Floor Designations on Jambs of Elevator Hoistway Entrance∗

11B*-407.2.3.2 *Reserved.

***11B*-407.3 Elevator door requirements.** Hoistway and car doors shall comply with *Section 11B*-407.3.

***11B*-407.3.1 Type.** Elevator doors shall be the horizontal sliding type. Car gates shall be prohibited.

***11B*-407.3.2 Operation.** Elevator hoistway and car doors shall open and close automatically.

Exception: Existing manually operated hoistway swing doors shall be permitted provided that they comply with *Sections 11B*-404.2.3 and *11B*-404.2.9. Car door closing shall not be initiated until the hoistway door is closed.

∗ The title for Figure *11B*-407.2.3.1 is incorrect. The title should read - **FIGURE *11B*-407.2.3.1 FLOOR DESIGNATIONS ON JAMBS OF ELEVATOR HOISTWAY ENTRANCES. In addition, the braille translation for number 1 is incorrect.**

***11B*-407.3.3 Reopening device.** Elevator doors shall be provided with a reopening device complying with *Section 11B*-407.3.3 that shall stop and reopen a car door and hoistway door automatically if the door becomes obstructed by an object or person.

Exception: Existing elevators with manually operated doors shall not be required to comply with *Section 11B*-407.3.3.

***11B*-407.3.3.1 Height.** The device shall be activated by sensing an obstruction passing through the opening at 5 inches (*127* mm) nominal and 29 inches (*737* mm) nominal above the finish floor.

***11B*-407.3.3.2 Contact.** The device shall not require physical contact to be activated, although contact is permitted to occur before the door reverses.

***11B*-407.3.3.3 Duration.** Door reopening devices shall remain effective for 20 seconds minimum.

***11B*-407.3.4 Door and signal timing.** The minimum acceptable time from notification that a car is answering a call until the doors of that car start to close shall be calculated from the following equation:

T = D/(1.5 ft/s) or T = D/(457 mm/s) = 5 seconds minimum where T equals the total time in seconds and D equals the distance (in feet or millimeters) from the point in the lobby or corridor 60 inches (*1524* mm) directly in front of the farthest call button controlling that car to the centerline of its hoistway door.

Exceptions:

1. For cars with in-car lanterns, T shall be permitted to begin when the signal is visible from the point 60 inches (*1524* mm) directly in front of the farthest hall call button and the audible signal is sounded.

2. ***Reserved.***

***11B*-407.3.5 Door delay.** Elevator doors shall remain fully open in response to a car call for *5* seconds minimum.

***11B*-407.3.6 Width.** The width of elevator doors shall comply with Table *11B*-407.4.1.

Exception: In existing elevators, a power-operated car door complying with *Section 11B*-404.2.3 shall be permitted.

***11B*-407.4 Elevator car requirements.** Elevator cars shall comply with *Section 11B*-407.4.

***11B*-407.4.1 Car dimensions.** Inside dimensions of elevator cars and clear width of elevator doors shall comply with Table *11B*-407.4.1.

Exception: *In existing buildings, where existing shaft configuration prohibits strict compliance with Section 11B-407.4.1, existing* elevator car configurations that provide a clear floor area of *18 square feet (1.67 m^2)* minimum and also provide an inside clear depth 54 inches (*1372* mm) minimum and a clear width *48 inches (1219 mm)* minimum shall be permitted.

Table *11B*-407.4.1 Elevator Car Dimensions

	Minimum Dimensions			
Door Location	**Door Clear Width**	**Inside Car, Side to Side**	**Inside Car, Back Wall to Front Return**	**Inside Car, Back Wall to Inside Face of Door**
Centered	42 inches (*1067* mm)	80 inches (*2032* mm)	51 inches (1295 mm)	54 inches (*1372* mm)
Side (off-centered)	36 inches (*914* mm)[1]	68 inches (*1727* mm)	51 inches (1295 mm)	54 inches (*1372* mm)
Any	36 inches (*914* mm)[1]	54 inches (*1372* mm)	80 inches (*2032* mm)	80 inches (*2032* mm)
Any	36 inches (*914* mm)[2]	60 inches (*1524* mm)[2]	60 inches (*1524* mm)[2]	60 inches (*1524* mm)[2]

1. A tolerance of minus ⅝ inch (*15.9* mm) is permitted.
2. Other car configurations that provide a turning space complying with *Section 11B*-304 with the door closed shall be permitted.

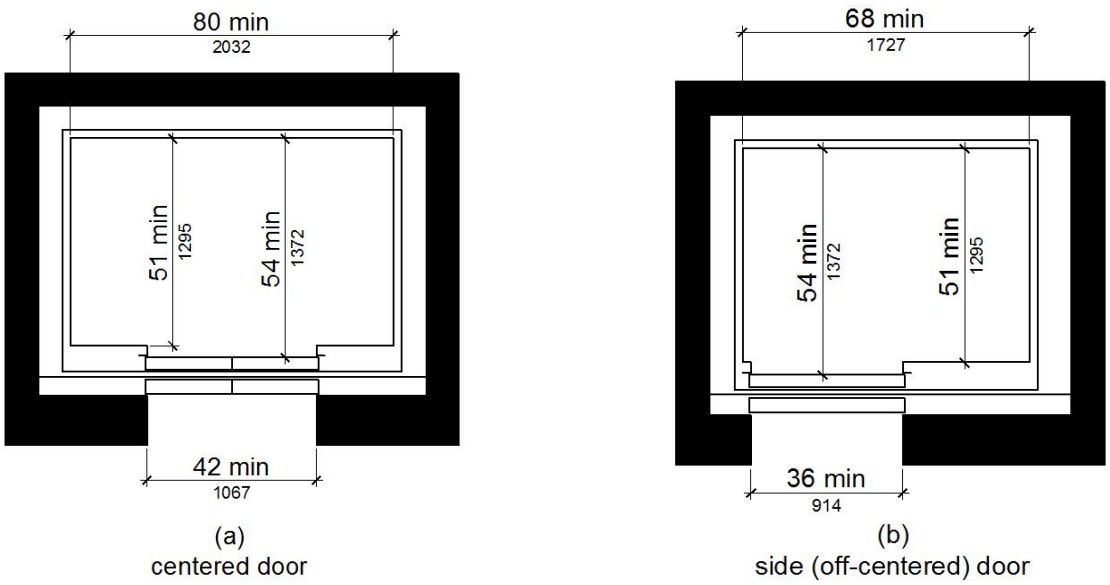

Figure *11B*-407.4.1
Elevator Car Dimensions

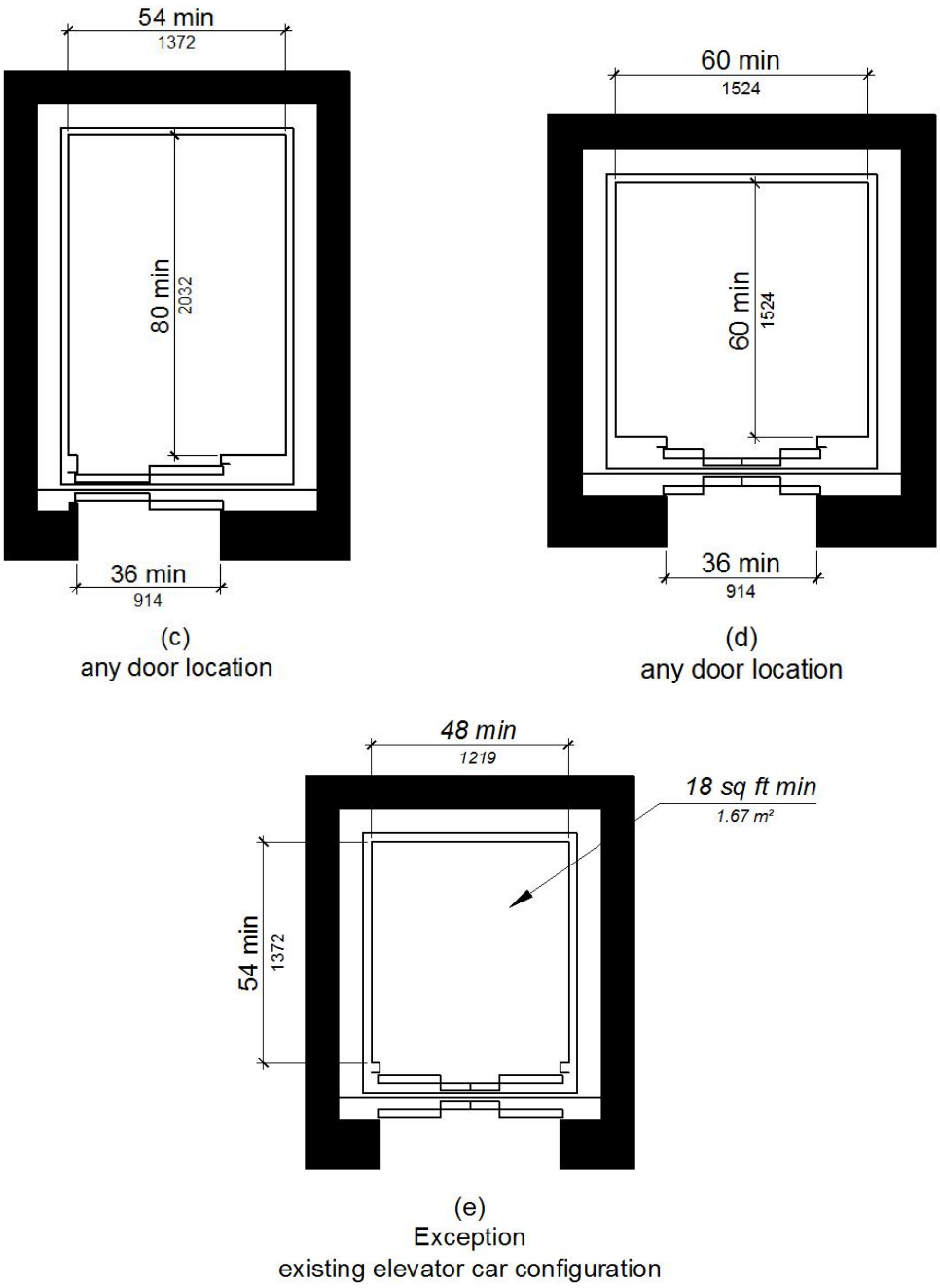

Figure *11B*-407.4.1
Elevator Car Dimensions

***11B*-407.4.2 Floor surfaces.** Floor surfaces in elevator cars shall comply with *Sections 11B*-302 and *11B*-303.

***11B*-407.4.3 Platform to hoistway clearance.** The clearance between the car platform sill and the edge of any hoistway landing shall be 1¼ inch (32 mm) maximum.

***11B*-407.4.4 Leveling.** Each car shall be equipped with a self-leveling feature that will automatically bring and maintain the car at floor landings within a tolerance of ½ inch (*12.7* mm) under rated loading to zero loading conditions.

***11B*-407.4.5 Illumination.** The level of illumination at the car controls, platform, car threshold and car landing sill shall be 5 foot candles (54 lux) minimum.

***11B*-407.4.6 Elevator car controls.** Where provided, elevator car controls shall comply with *Sections 11B*-407.4.6 and *11B*-309.4.

Exception: In existing elevators, where a new car operating panel complying with *Section 11B*-407.4.6 is provided, existing car operating panels *may remain operational and* shall not be required to comply with *Section 11B*-407.4.6.

***11B*-407.4.6.1 Location.** Controls shall be located within one of the reach ranges specified in *Section 11B*-308.

Exceptions:

1. Where the elevator panel serves more than 16 openings and a parallel approach is provided, buttons with floor designations shall be permitted to be 54 inches (*1372* mm) maximum above the finish floor.

2. In existing elevators, car control buttons with floor designations shall be permitted to be located 54 inches (*1372* mm) maximum above the finish floor where a parallel approach is provided.

***11B*-407.4.6.2 Buttons.** Car control buttons with floor designations shall comply with *Section 11B*-407.4.6.2.

Exception: ***Reserved.***

***11B*-407.4.6.2.1 Size *and shape*.** Buttons shall *have square shoulders*, be 3/4 inch (*19.1* mm) minimum in their smallest dimension *and be raised 1/8 inch (3.2 mm) plus or minus 1/32 inch (0.8 mm) above the surrounding surface.*

***11B*-407.4.6.2.2 Arrangement.** Buttons shall be arranged with numbers in ascending order. When two or more columns of buttons are provided they shall read from left to right.

11B-407.4.6.2.3 Illumination. *Car control buttons shall be illuminated.*

11B-407.4.6.2.4 Operation. *Car control buttons shall be activated by a mechanical motion that is detectable.*

***11B*-407.4.6.3 Keypads.** Car control keypads shall be in a standard telephone keypad arrangement and shall comply with *Section 11B*-407.4.7.2.

***11B*-407.4.6.4 Emergency controls.** Emergency controls shall comply with *Section 11B*-407.4.6.4.

***11B*-407.4.6.4.1 Height.** Emergency control buttons shall have their centerlines 35 inches (*889* mm) minimum above the finish floor.

***11B*-407.4.6.4.2 Location.** Emergency controls, including the emergency alarm, shall be grouped at the bottom of the panel.

***11B*-407.4.7 Designations and indicators of car controls.** Designations and indicators of car controls shall comply with *Section 11B*-407.4.7.

Exception: In existing elevators, where a new car operating panel complying with *Section 11B*-407.4.7 is provided, existing car operating panels *may remain operational and* shall not be required to comply with *Section 11B*-407.4.7.

***11B*-407.4.7.1 Buttons.** Car control buttons shall comply with *Section 11B*-407.4.7.1.

***11B*-407.4.7.1.1 Type.** Control buttons shall be identified by *raised characters or symbols, white on a black background, complying with Section 11B-703.2 and Braille complying with Section 11B-703.3.*

***11B*-407.4.7.1.2 Location.** Raised *characters or symbols* and Braille designations shall be placed immediately to the left of the control button to which the designations apply.

Exception: ***Reserved.***

***11B*-407.4.7.1.3 Symbols.** The control button for the emergency stop, alarm, door open, door close, main entry floor, and phone, shall be identified with *raised* symbols *and Braille* as shown in Table *11B*-407.4.7.1.3.

Table *11B*-407.4.7.1.3 Elevator Control Button Identification

Control Button	Raised Symbol	Braille Message
Emergency Stop		"ST"OP Three Cells
Alarm		AL"AR"M Four Cells
Door Open		OP"EN" Three Cells
Door Close		CLOSE Five Cells
Main Entry Floor		MA"IN" Three Cells
Phone		PH"ONE" Four Cells

***11B*-407.4.7.1.4 Visible indicators.** Buttons with floor designations shall be provided with visible indicators to show that a call has been registered. The visible indication shall extinguish when the car arrives at the designated floor.

11B-407.4.7.1.5 Button spacing. *A minimum clear space of 3/8 inch (9.5 mm) or other suitable means of separation shall be provided between rows of control buttons.*

***11B*-407.4.7.2 Keypads.** Keypads shall be identified by characters complying with *Section 11B*-703.5 and shall be centered on the corresponding keypad button. The number five key shall have a single raised dot. The dot shall be 0.118 inch (3 mm) to 0.120 inch (3.05 mm) base diameter and in other aspects comply with Table *11B*-703.3.1.

***11B*-407.4.8 Car position indicators.** Audible and visible car position indicators shall be provided in elevator cars.

***11B*-407.4.8.1 Visible indicators.** Visible indicators shall comply with *Section 11B*-407.4.8.1.

***11B*-407.4.8.1.1 Size.** Characters shall be ½ inch (*12.7* mm) high minimum.

***11B*-407.4.8.1.2 Location.** Indicators shall be located above the car control panel or above the door.

***11B*-407.4.8.1.3 Floor arrival.** As the car passes a floor and when a car stops at a floor served by the elevator, the corresponding character shall illuminate.

Exception: ***Reserved.***

11B*-407.4.8.1.4 *Reserved.

***11B*-407.4.8.2 Audible indicators.** Audible indicators shall comply with *Section 11B*-407.4.8.2.

***11B*-407.4.8.2.1 Signal type.** The signal shall be an automatic verbal annunciator which announces the floor at which the car is about to stop.

Exception: For elevators that have a rated speed of 200 feet per minute (1 m/s) or less, a non-verbal audible signal with a frequency of 1500 Hz maximum which sounds as the car passes or is about to stop at a floor served by the elevator shall be permitted.

***11B*-407.4.8.2.2 Signal level.** The verbal annunciator shall be 10 dB minimum above ambient, but shall not exceed 80 dB, measured at the annunciator.

***11B*-407.4.8.2.3 Frequency.** The verbal annunciator shall have a frequency of 300 Hz minimum to 3000 Hz maximum.

***11B*-407.4.9 Emergency communication.** Emergency two-way communication systems shall comply with *Section 11B*-308. *Raised* symbols *or* characters*, white on a black background, and Braille* shall be provided adjacent to the device and shall comply with *Sections 11B*-703.2 *and 11B-703.3*. *Emergency two-way communication systems between the elevator and a point outside the hoistway shall comply with ASME A17.1.*

11B-407.4.10 Support rail. *Support rails shall be provided on at least one wall of the car.*

DSA

Advisory 11B-407.4.10 Support rail. Support rails in elevator cabs are used in a different way than handrails along a walking surface such as a ramp or stairway. Support rails in elevator cabs are required to comply with the requirements of this section, not the requirements for handrails on walking surfaces. ■

11B-407.4.10.1 Location. *Clearance between support rails and adjacent surfaces shall be 1½ inches (38 mm) minimum. Top of support rails shall be 31 inches (787 mm) minimum to 33 inches (838 mm) maximum above the floor of the car. The ends of the support rail shall be 6 inches (152 mm) maximum from adjacent walls.*

11B-407.4.10.2 Surfaces. *Support rails shall be smooth and any surface adjacent to them shall be free of sharp or abrasive elements.*

11B-407.4.10.3 Structural strength. *Allowable stresses shall not be exceeded for materials used when a vertical or horizontal force of 250 pounds (1112 N) is applied at any point on the support rail, fastener, mounting device, or supporting structure.*

***11B*-408 Limited-use/limited-application elevators**

***11B*-408.1 General.** Limited-use/limited-application elevators shall comply with *Section 11B*-408 and with ASME A17.1. They shall be passenger elevators as classified by ASME A17.1. Elevator operation shall be automatic.

> **DSA**
>
> **Advisory 11B-408.1 General.** Elevator safety is regulated by the California Department of Occupational Safety and Health, Elevator Ride and Tramway Unit - see Title 8, California Code of Regulations for more information.
>
> DSA regulates the usability of elevators and platform (wheelchair) lifts for persons with disabilities. Accessibility scoping requirements for elevators and lifts are located in Sections 11B-206.6 and 11B-207.6; technical requirements are located in Sections 11B-407, 11B-408, 11B-409 and 11B-410. ■

***11B*-408.2 Elevator landings.** Landings serving limited-use/limited-application elevators shall comply with *Section 11B*-408.2.

***11B*-408.2.1 Call buttons.** Elevator call buttons and keypads shall comply with *Section 11B*-407.2.1.

***11B*-408.2.2 Hall signals.** Hall signals shall comply with *Section 11B*-407.2.2.

***11B*-408.2.3 Hoistway signs.** Signs at elevator hoistways shall comply with *Section 11B*-407.2.3.1.

***11B*-408.3 Elevator doors.** Elevator hoistway doors shall comply with *Section 11B*-408.3.

***11B*-408.3.1 Sliding doors.** Sliding hoistway and car doors shall comply with *Sections 11B*-407.3.1 through *11B*-407.3.3 and *11B*-408.4.1.

***11B*-408.3.2 Swinging doors.** Swinging hoistway doors shall open and close automatically and shall comply with *Sections 11B*-404, *11B*-407.3.2 and *11B*-408.3.2.

***11B*-408.3.2.1 Power operation.** Swinging doors shall be power-operated and shall comply with ANSI/BHMA A156.19.

***11B*-408.3.2.2 Duration.** Power-operated swinging doors shall remain open for 20 seconds minimum when activated.

***11B*-408.4 Elevator cars.** Elevator cars shall comply with *Section 11B*-408.4.

***11B*-408.4.1 Car dimensions and doors.** Elevator cars shall provide a clear width 42 inches (*1067* mm) minimum and a clear depth 54 inches (*1372* mm) minimum. Car doors shall be positioned at the narrow ends of cars and shall provide 32 inches (*813* mm) minimum clear width.

Exceptions:

1. Cars that provide a clear width 51 inches (1295 mm) minimum shall be permitted to provide a clear depth 51 inches (1295 mm) minimum provided that car doors provide a clear opening 36 inches (*914* mm) wide minimum.

2. ***Reserved.***

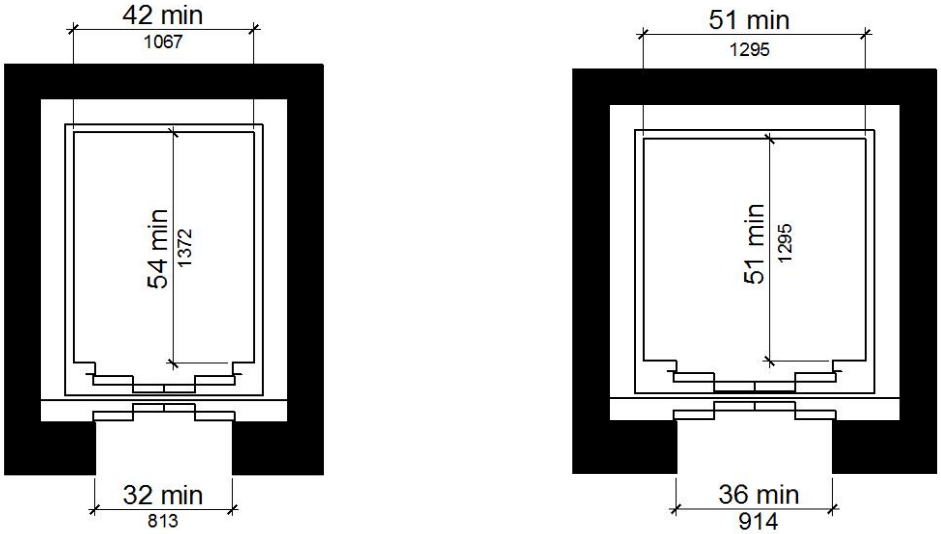

(a)
new construction

(b)
Exception 1

Model code figure not applicable

(c)
reserved

Figure *11B*-408.4.1
Limited-Use/Limited-Application (LULA) Elevator Car Dimensions

***11B*-408.4.2 Floor surfaces.** Floor surfaces in elevator cars shall comply with *Sections 11B*-302 and *11B*-303.

***11B*-408.4.3 Platform to hoistway clearance.** The platform to hoistway clearance shall comply with *Section 11B*-407.4.3.

***11B*-408.4.4 Leveling.** Elevator car leveling shall comply with *Section 11B*-407.4.4.

***11B*-408.4.5 Illumination.** Elevator car illumination shall comply with *Section 11B*-407.4.5.

***11B*-408.4.6 Car controls.** Elevator car controls shall comply with *Section 11B*-407.4.6. Control panels shall be centered on a side wall.

***11B*-408.4.7 Designations and indicators of car controls.** Designations and indicators of car controls shall comply with *Section 11B*-407.4.7.

***11B*-408.4.8 Emergency communications.** Car emergency signaling devices complying with *Section 11B*-407.4.9 shall be provided.

***11B*-409 Private residence elevators**

***11B*-409.1 General.** Private residence elevators that are provided within a residential dwelling unit required to provide mobility features complying with *Sections 11B*-809.2 through *11B*-809.4 shall comply

with *Section 11B*-409 and with ASME A17.1. They shall be passenger elevators as classified by ASME A17.1. Elevator operation shall be automatic.

DSA

Advisory 11B-409.1 General. Elevator safety is regulated by the California Department of Occupational Safety and Health, Elevator Ride and Tramway Unit - see Title 8, California Code of Regulations for more information.

DSA regulates the usability of elevators and platform (wheelchair) lifts for persons with disabilities. Accessibility scoping requirements for elevators and lifts are located in Sections 11B-206.6 and 11B-207.6; technical requirements are located in Sections 11B-407, 11B-408, 11B-409 and 11B-410. ■

***11B*-409.2 Call buttons.** Call buttons shall be ¾ inch (*19.1* mm) minimum in the smallest dimension and shall comply with *Section 11B*-309.

***11B*-409.3 Elevator doors.** Hoistway doors, car doors, and car gates shall comply with *Sections 11B*-409.3 and *11B*-404.

Exception: Doors shall not be required to comply with the maneuvering clearance requirements in *Section 11B*-404.2.4.1 for approaches to the push side of swinging doors.

***11B*-409.3.1 Power operation.** Elevator car and hoistway doors and gates shall be power operated and shall comply with ANSI/BHMA A156.19. Power operated doors and gates shall remain open for 20 seconds minimum when activated.

Exception: In elevator cars with more than one opening, hoistway doors and gates shall be permitted to be of the manual-open, self-close type.

***11B*-409.3.2 Location.** Elevator car doors or gates shall be positioned at the narrow end of the clear floor spaces required by *Section 11B*-409.4.1.

***11B*-409.4 Elevator cars.** Private residence elevator cars shall comply with *Section 11B*-409.4.

***11B*-409.4.1 Inside dimensions of elevator cars.** Elevator cars shall provide a clear floor space of 36 inches (*914* mm) minimum by 48 inches (*1219* mm) minimum and shall comply with *Section 11B*-305.

***11B*-409.4.2 Floor surfaces.** Floor surfaces in elevator cars shall comply with *Sections 11B*-302 and *11B*-303.

***11B*-409.4.3 Platform to hoistway clearance.** The clearance between the car platform and the edge of any landing sill shall be 1½ inch (38 mm) maximum.

***11B*-409.4.4 Leveling.** Each car shall automatically stop at a floor landing within a tolerance of ½ inch (*12.7* mm) under rated loading to zero loading conditions.

***11B*-409.4.5 Illumination levels.** Elevator car illumination shall comply with *Section 11B*-407.4.5.

***11B*-409.4.6 Car controls.** Elevator car control buttons shall comply with *Sections 11B*-409.4.6, *11B*-309.3, *11B*-309.4, and shall be raised or flush.

***11B*-409.4.6.1 Size.** Control buttons shall be 3/4 inch (*19.1* mm) minimum in their smallest dimension.

***11B*-409.4.6.2 Location.** Control panels shall be on a side wall, 12 inches (305 mm) minimum from any adjacent wall.

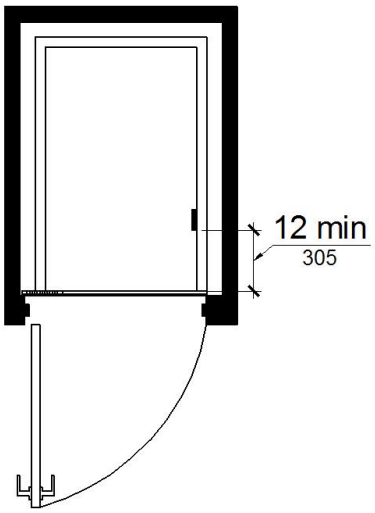

Figure *11B*-409.4.6.2
Location of Private Residence Elevator Control Panel

***11B*-409.4.7 Emergency communications.** Emergency two-way communication systems shall comply with *Section 11B*-409.4.7.

***11B*-409.4.7.1 Type.** A telephone and emergency signal device shall be provided in the car.

***11B*-409.4.7.2 Operable parts.** The telephone and emergency signaling device shall comply with *Sections 11B*-309.3 and *11B*-309.4.

***11B*-409.4.7.3 Compartment.** If the telephone or device is in a closed compartment, the compartment door hardware shall comply with *Section 11B*-309.

***11B*-409.4.7.4 Cord.** The telephone cord shall be 29 inches (*737* mm) long minimum.

***11B*-410 Platform lifts**

***11B*-410.1 General.** Platform lifts shall comply with ASME A18.1. Platform lifts shall not be attendant-operated and shall provide unassisted entry and exit from the lift.

USDOJ

Advisory 11B-410.1 General. Inclined stairway chairlifts and inclined and vertical platform lifts are available for short-distance vertical transportation. Because an accessible route requires an 80 inch (2030 mm) vertical clearance, care should be taken in selecting lifts as they may not be equally suitable for use by people using wheelchairs and people standing. If a lift does not provide 80 inch (2030 mm) vertical clearance, it cannot be considered part of an accessible route in new construction.

The ADA and other Federal civil rights laws require that accessible features be maintained in working order so that they are accessible to and usable by those people they are intended to benefit. Building owners are reminded that the ASME A18 Safety Standard for Platform Lifts and Stairway Chairlifts requires routine maintenance and inspections. Isolated or temporary interruptions in service due to maintenance or repairs may be unavoidable; however, failure to take prompt action to effect repairs could constitute a violation of Federal laws and these requirements. ■

DSA

Advisory 11B-410.1 General. Elevator safety is regulated by the California Department of Occupational Safety and Health, Elevator Ride and Tramway Unit - see Title 8, California Code of Regulations for more information.

DSA regulates the usability of elevators and platform (wheelchair) lifts for persons with disabilities. Accessibility scoping requirements for elevators and lifts are located in Sections 11B-206.6 and 11B-207.6; technical requirements are located in Sections 11B-407, 11B-408, 11B-409 and 11B-410. ■

***11B*-410.2 Floor surfaces.** Floor surfaces in platform lifts shall comply with *Sections 11B*-302 and *11B*-303.

***11B*-410.3 Clear floor space.** Clear floor space in platform lifts shall comply with *Section 11B*-305.

***11B*-410.4 Platform to runway clearance.** The clearance between the platform sill and the edge of any runway landing shall be 1¼ inch (32 mm) maximum.

***11B*-410.5 Operable parts.** Controls for platform lifts shall comply with *Section 11B*-309.

***11B*-410.6 Doors and gates.** Platform lifts shall have low-energy power-operated doors or gates complying with *Section 11B*-404.3. Doors shall remain open for 20 seconds minimum. End doors and gates shall provide a clear width 32 inches (*813* mm) minimum. Side doors and gates shall provide a clear width 42 inches (*1067* mm) minimum.

Exception: Platform lifts serving two landings maximum and having doors or gates on opposite sides shall be permitted to have self-closing manual doors or gates.

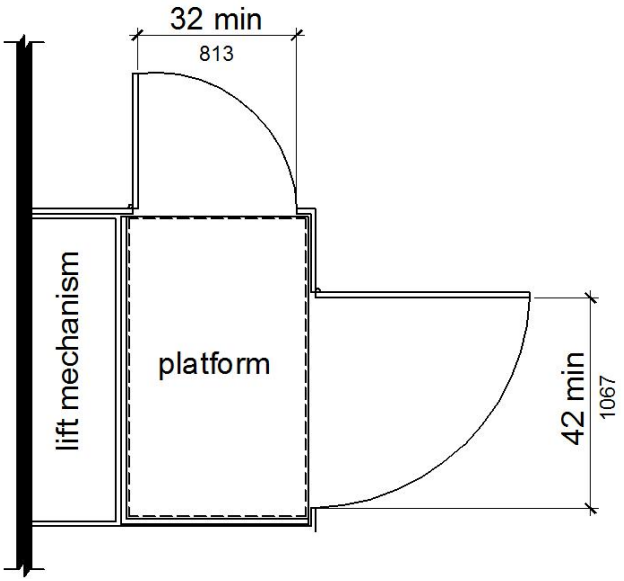

Figure *11B*-410.6
Platform Lift Doors and Gates

11B-410.7 Landing size. *The minimum size of landings at platform lifts shall be 60 inches by 60 inches (1524 mm by 1524 mm).*

11B-410.8 Restriction sign. *A sign complying with Section 11B-703.5 shall be posted in a conspicuous place at each landing and within the platform enclosure stating "No Freight" and include the International Symbol of Accessibility complying with Section 11B-703.7.2.1.*

DSA

For lifts with a signed installation contract **before** May 1, 2008:

CCR, Title 8, Section 3094 provides safety regulations for Vertical Platform (Wheelchair) Lifts. This section includes requirements which address platform size and gate configurations for lifts with 90-degree egress, and additionally requires signs posted at the landings as follows:

(1) International Symbol of Accessibility,
(2) lift capacity,
(3) the telephone number to call in case of emergency, and
(4) the lift shall not be used to transport materials or equipment. ■

DSA

For lifts with a signed installation contract **on or after** May 1, 2008:

In addition to the accessibility requirements of the building code, Vertical Platform (Wheelchair) Lifts are required to comply with the applicable provisions of the Elevator Code, CCR, Title 8, Section 3142.1, which provides safety regulations for lifts. This section incorporates ASME A18.1-2003, sections 2 and 5 by reference, and requires compliance with CCR, Title 8, Sections 3094.2(d), 3094.2(e), 2094.2(g), and 3094.2(p).

These regulations address technical requirements for lifts, including platform size, gate configurations for lifts with 90-degree egress, and required signage as follows:

(1) lift capacity, and
(2) "No Freight" prohibiting the transport of materials or equipment. ■

11B-411 Destination-oriented elevators

11B-411.1 General. *Destination-oriented elevators shall comply with Section 11B-411 and with ASME A17.1. They shall be passenger elevators as classified by ASME A17.1. Elevator operation shall be automatic.*

11B-411.1.1 Floor designations. *In facilities served by destination-oriented elevator systems, floor designations shall be numeric characters only. Floor designations shall be "one" (1) or "zero" (0) at the main entry level and shall increase by one for each successive higher story or level. The initial floor below the main entry level shall be designated "minus one" (-1) and the designation for each successive lower story or level shall decrease by one. Stories or levels shall not be designated by alphabetic characters.*

Exceptions:

1. *In existing facilities where new elevators are installed or existing elevators are altered into a destination-oriented elevator system, levels within stories, such as mezzanines located above or below the main entry level shall be permitted to be designated with an alpha-numeric character such as "M2", indicating "mezzanine" and the "story number",*

respectively, in which it is located, provided there is no duplication with alphanumeric designations of elevator cars in the facility.

2. *Non-successive floor numbering shall be permitted where a specific floor number is omitted or where a floor is frequented only by service personnel for maintenance, repair or occasional monitoring of equipment.*

11B-411.1.2 Car designations. *Elevator cars shall be designated with a single alphabetic character.*

Exception: *Elevator systems with more than 26 elevators shall be permitted to use alpha-numeric designations such as "A1".*

11B-411.2 Elevator landing requirements. *Elevator landings shall comply with Section 11B-411.2.*

11B-411.2.1 Hall call consoles. *Hall call consoles shall comply with Sections 11B-411.2.1 and 11B-309.*

11B-411.2.1.1 Location. *Hall call consoles shall be wall-mounted. On floors with a building entry, including parking and transfer levels, each hoistway entrance shall be adjacent to a hall call console. On other floors, a minimum of one hoistway entrance shall be adjacent to a hall call console.*

Exception: *Hall call consoles beyond those required by Section 11B-411.2.1.1 shall be permitted to be provided outside the elevator landing and to be wall-mounted, pedestal-mounted, or mounted on a kiosk or security turnstile.*

11B-411.2.1.2 Required features. *Hall call consoles shall include a touch screen or keypad with display screen, an accessibility function button, and audio output loudspeaker.*

11B-411.2.1.2.1 Keypads. *Keypads shall be in a 12-key ascending telephone keypad layout. Characters and symbols shall be centered on the corresponding button. The number five key shall have a single raised dot. The dot shall have a base diameter of 0.118 inch (3 mm) minimum and 0.120 inch (3.05 mm) maximum and a height of 0.025 inch (0.6 mm) minimum and 0.037 inch (0.9 mm) maximum. Keypads shall have a star (★) on the lower left button and a minus sign (-) on the lower right button. From any level above and below the main egress level, when the star button is pressed an elevator shall be dispatched to the main egress level.*

11B-411.2.1.2.2 Touch screen. *Touch screen display shall comply with Section 11B-411.2.1.2.4. The touch screen shall provide written or visual instruction on the screen as to its use.*

11B-411.2.1.2.3 Accessibility function button. *The accessibility function button shall be identified by the International Symbol of Accessibility and a raised indication. The International Symbol of Accessibility shall comply with Section 11B-703.7.2.1, and shall be 5/8 inch (15.9 mm) minimum in height. The indication shall be three raised dots. Each dot shall have a base diameter of 0.059 inch (1.5 mm) minimum and 0.063 inch (1.6 mm) maximum and a height of 0.025 inch (0.6 mm) minimum and 0.037 inch (0.9 mm) maximum. The dots shall be spaced ¼ inch (6.4 mm), measured center to center, in the form of an equilateral triangle with a vertex pointing up. The accessibility function button shall not be provided with a key repeat function.*

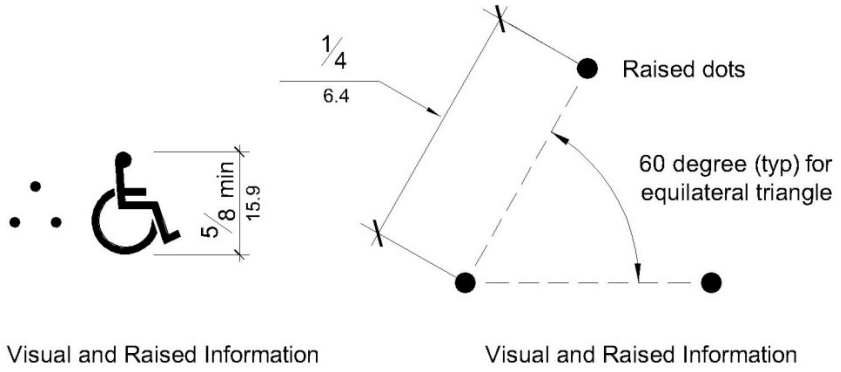

Figure 11B-411.2.1.2.3
Destination-Oriented Elevator Accessibility Function Button Indication

11B-411.2.1.2.4 Display screen*. Upon activation of the accessibility function button, the display screen shall display information on the location and use of the star (★) and minus sign (-) buttons, user input confirmation, elevator assignment characters, direction to the assigned elevator, and error messages. The display screen shall comply with Section 11B-411.2.1.2.4.*

11B-411.2.1.2.4.1 Contrast. *Display screens shall provide contrast with light characters and symbols on a dark background or dark characters and symbols on a light background. The background shall be solid and static.*

11B-411.2.1.2.4.2 Size. *Elevator assignment characters shall be 1 inch high (25 mm) minimum.*

11B-411.2.1.2.4.3 Duration. *Elevator assignment characters shall be displayed for a minimum of 5 seconds.*

11B-411.2.1.2.5 Audio output. *Upon activation of the accessibility function button, the audio output shall provide verbal announcements of operating instructions, location and use of the star (★) and minus sign (-) buttons, user input confirmation, announcement of the elevator assignment characters, direction to the assigned elevator, and error messages. Audio output shall be recorded or digitized human speech, and shall be delivered through a loudspeaker. Auditory volume shall be at least 10 dB above ambient sound level, but shall not exceed 80 dB, measured 36 inches (914 mm) in front of the console. At hall call console locations where the ambient sound level varies, auditory volume shall be maintained at the required volume by an automatic gain control or shall be set at not less than 75 dB.*

11B-411.2.1.3 Arrangement. *Hall call console arrangement of required features shall comply with Section 11B-411.2.1.3.*

11B-411.2.1.3.1 Keypad call console arrangement. *Where keypad call consoles are provided, the display screen shall be located directly above the keypad. The accessibility function button shall be located directly below the keypad at a height of 36 inches (914 mm) to 42 inches (1067 mm) above the finish floor.*

11B-411.2.1.3.2 Touch screen call console arrangement. *Where touch screen call consoles are provided, the touch screen shall be located directly above the accessibility function button. The accessibility function button shall be located at a height of 36 inches (914 mm) to 42 inches (1067 mm) above the finish floor.*

11B-411.2.1.3.3 Proximity of required elements. *Required features shall be provided on a hall call console assembly or as individual elements grouped in close proximity.*

11B-411.2.1.3.4 Position. *The face of individual elements or group of individual elements that are operated by user input shall slope away from the user at 15 to 25 degrees from the vertical plane. The face of hall call console assemblies and the face of touch screens shall be sloped away from the user at 7 to 25 degrees from the vertical plane. Display screens and touch screens shall be positioned so glare is reduced on the screen.*

11B-411.2.1.4 Additional features. *Hall call console additional features, if provided, shall comply with Sections 11B-309 and 11B-411.2.1.4.*

11B-411.2.1.4.1 Hall call console additional buttons. *Hall call console buttons provided in addition to the accessibility function button and keypad buttons shall comply with Section 11B-411.2.1.4.1. Buttons in addition to the accessibility function button are not permitted on hall call consoles using a touch screen.*

11B-411.2.1.4.1.1 Arrangement. *Buttons shall be arranged in columns to the right of the keypad with a minimum horizontal spacing of 1.5 times the horizontal spacing between the numeric keys and with the same vertical spacing as the numeric keys.*

11B-411.2.1.4.1.2 Identification. *Buttons shall be identified by raised characters and symbols, white on a black background, complying with Section 11B-703.2 and Braille complying with Section 11B-703.3. Identification shall be placed immediately to the left of the control button to which the designation applies.*

11B-411.2.1.4.2 Security or access controls. *Security or access control system card readers associated with elevator operation shall be in close proximity to each hall call console in a consistent manner throughout the facility.*

11B-411.2.1.5 Button requirements. *Keypad buttons, the accessibility function button, and additional hall call console buttons shall comply with Section 11B-411.2.1.5.*

11B-411.2.1.5.1 Size. *Buttons shall have square shoulders, be 3/4 inch (19.1 mm) minimum in the smallest dimension and shall be raised 1/8 inch (3.2 mm) plus or minus 1/32 inch (0.8 mm) above the surrounding surface. The buttons shall be activated by a mechanical motion that is detectable.*

11B-411.2.1.5.2 Color. *Characters and symbols on buttons, where provided, shall be white on a black background.*

11B-411.2.1.6 Identification of floors served. *In buildings with two or more elevator banks, each serving a different group of specific floors, hall call consoles located on floors with a building entry, including parking and transfer levels, shall be provided with signage complying with Sections 11B-703.2, 11B-703.3, and 11B-703.5 on the surface of or above the hall call console stating "FLOORS n1 – n2", where n1 - n2 represents the range of floors served. Characters shall be white on a black background. When the accessibility function button is pressed, the audio output shall provide a verbal announcement of the floors served by the elevator group.*

11B-411.2.1.7 Elevator car assignment. *When the accessibility function button is pressed, elevator car assignment shall comply with Section 11B-411.2.1.7.*

11B-411.2.1.7.1 Assignment by keypad hall call console. *The audio output shall provide verbal instruction for the user to enter a destination floor. The selected destination floor shall be confirmed by verbal announcement and on the display screen. Verbal and visible indication of an invalid input shall be provided. The display screen shall indicate the elevator assignment characters and a verbal announcement shall be made of the assigned elevator responding to the call. Visual and verbal direction to the assigned elevator shall be provided.*

11B-411.2.1.7.2 Assignment by touch screen hall call console. *The audio output shall provide verbal instruction for the user to press the accessibility function button as a response to verbal direction in order to select the destination floor. The selected destination floor shall be confirmed by verbal announcement and on the display screen. Verbal and visible indication of an invalid input shall be provided. The display screen shall indicate the elevator assignment characters and a verbal announcement shall be made of the assigned elevator responding to the call. Visual and verbal direction to the assigned elevator shall be provided.*

Exceptions. *In addition to assignment by Section 11B-411.2.1.7.2, a verbal announcement providing the user with an option to select an alternative mode of operation shall be permitted. Alternative operation shall be by one of the following options:*

1. *Virtual keypad. The size of the keypad shall be a nominal 4 inches wide by 5 inches high in a 12-key ascending telephone keypad layout centered in the console. Characters and symbols shall be centered on the corresponding button. Keypads shall have a star (✶) on the lower left button and a minus sign (-) on the lower right button. Operation shall be by contact with the touch screen with a press on the key. The audio output shall provide user input confirmation after each key is pressed. Keys shall not be provided with a key repeat function. From any level above and below the main egress level, when the star button is pressed an elevator shall be dispatched to the main egress level.*

2. *Gesture-based mode of operation. Operation shall be by contact with the touch screen, without specific contact with an icon, and using established non-proprietary gestures for selection and input, including but not limited to tapping, sliding, and tap-hold contact-release to select. The audio output shall provide verbal direction on use of the touch screen, and indication of floor selection options until assignment to the elevator is given.*

11B-411.2.1.7.3 Assignment by security credential. *If a security system or other form of access control system is provided, the audio output shall provide a verbal announcement and direction to the location of the access control activation sensor, such as "present security credential at the sensor immediately to the left". Upon presentation of security credential, the destination floor shall be confirmed by verbal announcement and on the display screen. The display screen shall indicate the elevator assignment characters and a verbal announcement shall be made of the assigned elevator responding to the call. Visual and verbal direction to the assigned elevator shall be provided.*

11B-411.2.1.7.4 Adjacency assignment. *The system shall assign an elevator car immediately to the left or right of the hall call console.*

Exception: *The most adjacent elevator serving the selected floor shall be assigned by hall call consoles located outside the elevator landing.*

11B-411.2.2 Elevator car identification at elevator landings. *Elevator car identification shall comply with Section 11B-411.2.2.*

11B-411.2.2.1 Visible identification. *Above or adjacent to each elevator car entrance there shall be a visible identification fixture with a car designation character. The identification fixture shall be 80 inches (2032 mm) minimum above the finish floor or ground to the bottom of the fixture. The characters on the fixture shall be upper case with a height of 4 inches (102 mm) minimum complying with Sections 11B-703.5.1, 11B-703.5.3, 11B-703.5.4, 11B-703.5.7, and 11B-703.5.8.*

Exception: *Existing buildings shall be permitted to have a visible identification fixture with a car designation character adjacent to each elevator car entrance centered at 72 inches (1829 mm) above the finish floor or ground. The character on the fixture shall be upper case with a*

height of 2 1/2 inches (64 mm) minimum complying with Sections 11B-703.5.1, 11B-703.5.3, 11B-703.5.4, 11B-703.5.7, and 11B-703.5.8.

***11B-411.2.2.2 Verbal identification**. When the accessibility function button is pressed, verbal announcement of the car designation shall be provided at the elevator car entrance upon arrival. Audio output shall be recorded or digitized human speech, and shall be delivered through a loudspeaker. The verbal annunciator shall have a frequency of 300 Hz minimum and 3000 Hz maximum. Auditory volume shall be at least 10 dB above ambient sound level, but shall not exceed 80 dB, measured 36 inches (914 mm) in front of the elevator entrance and at 48 inches (1219 mm) above the floor. At elevator entrances where the ambient sound level varies, auditory volume shall be maintained at the required volume by an automatic gain control or shall be set at not less than 75 dB.*

***11B-411.2.3 Signs on jambs of elevator hoistway entrances.** Signs on jambs of elevator hoistway entrances shall comply with Section 11B-411.2.3.*

***11B-411.2.3.1 Floor designation signs.** Floor designation signs complying with Sections 11B-703.2 and 11B-703.4.1 shall be provided on both jambs of elevator hoistway entrances. Signs shall be provided in both raised characters and Braille. Raised characters shall be 2 inches (51 mm) high. A raised star placed to the left of the floor designation, shall be provided on both jambs at the main entry level. The outside diameter of the star shall be 2 inches (51 mm) and all points shall be of equal length. Raised characters, including the star, shall be white on a black background. Braille complying with Section 11B-703.3 shall be placed below the corresponding raised characters and the star. The Braille translation for the star shall be "MAIN". Applied plates are acceptable if they are permanently fixed to the jamb.*

***11B-411.2.3.2 Car designation signs.** Car designation signs complying with Sections 11B-703.2 and 11B-703.4.1 shall be provided on both jambs of the hoistway immediately below the floor designation. Signs shall be provided in both raised characters and Braille. Raised characters shall be 2 inches (51 mm) high. Raised characters shall be white on a black background. Braille complying with Section 11B-703.3 shall be placed below the corresponding raised characters. Applied plates are acceptable if they are permanently fixed to the jamb.*

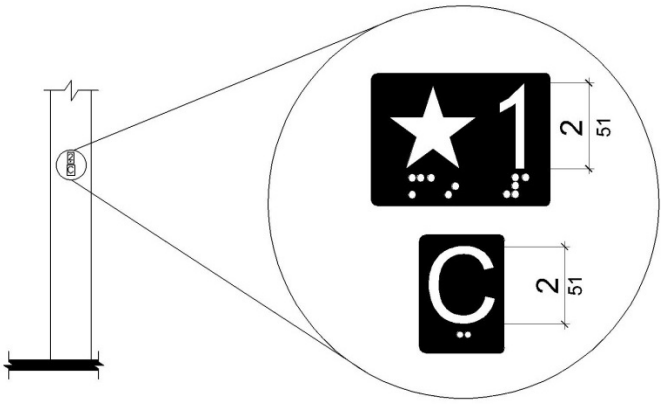

Figure 11B-411.2.3
Floor Designation and Car Designation Signs on Jambs
of Destination-Oriented Elevator Hoistway Signs

***11B-411.3 Elevator door requirements.** Hoistway and car doors shall comply with Section 11B-411.3.*

***11B-411.3.1 Type.** Elevator door type shall comply with Section 11B-407.3.1.*

***11B-411.3.2 Operation.** Elevator hoistway and car doors shall open and close automatically.*

11B-411.3.3 Reopening device. *Elevator doors shall be provided with a reopening device complying with Section 11B-411.3.3 that shall stop and reopen a car door and hoistway door automatically if the door becomes obstructed by an object or person.*

11B-411.3.3.1 Height. *The height of the reopening device shall comply with Section 11B-407.3.3.1.*

11B-411.3.3.2 Contact. *The device contact shall comply with Section 11B-407.3.3.2.*

11B-411.3.3.3 Duration. *The door reopening device duration shall comply with Section 11B-407.3.3.3.*

11B-411.3.4 Door delay. *Door delay shall comply with Section 11B-407.3.5.*

11B-411.3.5 Width. *The width of elevator doors shall comply with Table 11B-407.4.1.*

11B-411.4 Elevator car requirements. *Elevator cars shall comply with Section 11B-411.4.*

11B-411.4.1 Car dimensions. *Inside dimensions of elevator cars and clear width of elevator doors shall comply with Section 11B-407.4.1.*

11B-411.4.2 Floor surfaces. *Floor surfaces in elevator cars shall comply with Section 11B-407.4.2.*

11B-411.4.3 Platform to hoistway clearance. *Platform to hoistway clearance shall comply with Section 11B-407.4.3.*

11B-411.4.4 Leveling. *Elevator car leveling shall comply with Section 11B-407.4.4.*

11B-411.4.5 Illumination. *The level of illumination at the car controls shall comply with Section 11B-407.4.5.*

11B-411.4.6 Elevator car controls. *Where provided, elevator car controls shall comply with Sections 11B-411.4.6 and 11B-309.4.*

11B-411.4.6.1 Location. *Controls shall be located within one of the reach ranges specified in Section 11B-308.*

11B-411.4.6.2 Buttons. *Car control buttons shall comply with Sections 11B-407.4.6.2.1 and 11B-407.4.6.2.4. The car shall not have non-functional, exposed floor buttons.*

11B-411.4.6.3 Emergency controls. *Emergency controls shall comply with Section 11B-407.4.6.4.*

11B-411.4.7 Designations and indicators of car control buttons. *Designations and indicators of car control buttons shall comply with Section 11B-411.4.7.*

11B-411.4.7.1 Type. *Control button type shall comply with Section 11B-407.4.7.1.1.*

11B-411.4.7.2 Location. *Raised characters or symbols and Braille designations shall comply with Section 11B-407.4.7.1.2.*

11B-411.4.7.3 Symbols. *The control button for the emergency stop, alarm, door open, door close, and phone, shall be identified with raised symbols and Braille as shown in Table 11B-407.4.7.1.3.*

11B-411.4.7.4 Button spacing. *Button spacing shall comply with Section 11B-407.4.7.1.5.*

11B-411.4.8 Car position indicators. *Audible and visible car position indicators shall be provided in elevator cars.*

11B-411.4.8.1 Visible indicators. *Visible indicators shall comply with Section 11B-411.4.8.1.*

11B-411.4.8.1.1 Size. *Characters shall comply with Section 11B-407.4.8.1.1.*

11B-411.4.8.1.2 Location. *Location of indicators shall comply with Section 11B-407.4.8.1.2.*

11B-411.4.8.2 Audible indicators. *Audible indicators shall comply with Section 11B-411.4.8.2.*

11B-411.4.8.2.1 Signal type. *The signal shall be an automatic verbal annunciator which announces the floor at which the car is about to stop.*

11B-411.4.8.2.2 Signal level. *The verbal annunciator signal level shall comply with Section 11B-407.4.8.2.2.*

11B-411.4.8.2.3 Frequency. *The verbal annunciator frequency shall comply with Section 11B-407.4.8.2.3.*

11B-411.4.9 Emergency communication. *Emergency communication shall comply with Section 11B-407.4.9.*

11B-411.4.10 Support rail. *Support rails complying with Section 11B-407.4.10 shall be provided on at least one wall of the car.*

11B-411.4.11 Floor destination indicators. *There shall be on each elevator car door jamb a visual display indicating floor destinations.*

11B-411.4.11.1 Height. *Floor destination characters shall be 1 inch (25 mm) high minimum complying with Section 11B-703.5.3.*

11B-411.4.11.2 Contrast. *Visual display shall provide contrast with light characters on a dark background or dark characters on a light background. The background shall be solid and static.*

11B-411.4.11.3 Duration. *Floor destination characters shall be displayed upon elevator car arrival at the input floor and shall not extinguish until the elevator car arrives at the destination floor.*

11B-501 General

***11B*-501.1 Scope.** The provisions of *Division* 5 shall apply where required by *Division* 2 or where referenced by a requirement in this *chapter*.

11B-502 Parking spaces

***11B*-502.1 General.** Car and van parking spaces shall comply with *Section 11B*-502. Where parking spaces are marked with lines, width measurements of parking spaces and access aisles shall be made from the centerline of the markings.

> **Exception:** Where parking spaces or access aisles are not adjacent to another parking space or access aisle, measurements shall be permitted to include the full width of the line defining the parking space or access aisle.

***11B*-502.2 Vehicle spaces.** *Car and van parking spaces shall be 216 inches (5486 mm) long minimum.* Car parking spaces shall be *108 inches (2743 mm)* wide minimum and van parking spaces shall be *144 inches (3658 mm)* wide minimum, shall be marked to define the width, and shall have an adjacent access aisle complying with *Section 11B*-502.3.

> **Exception:** Van parking spaces shall be permitted to be *108 inches (2743 mm)* wide minimum where the access aisle is 96 inches (*2438* mm) wide minimum.

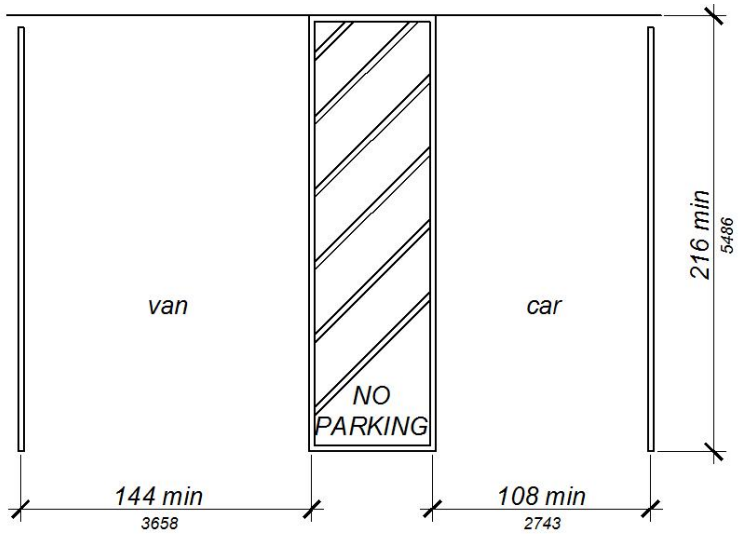

(a)
perpendicular
parking

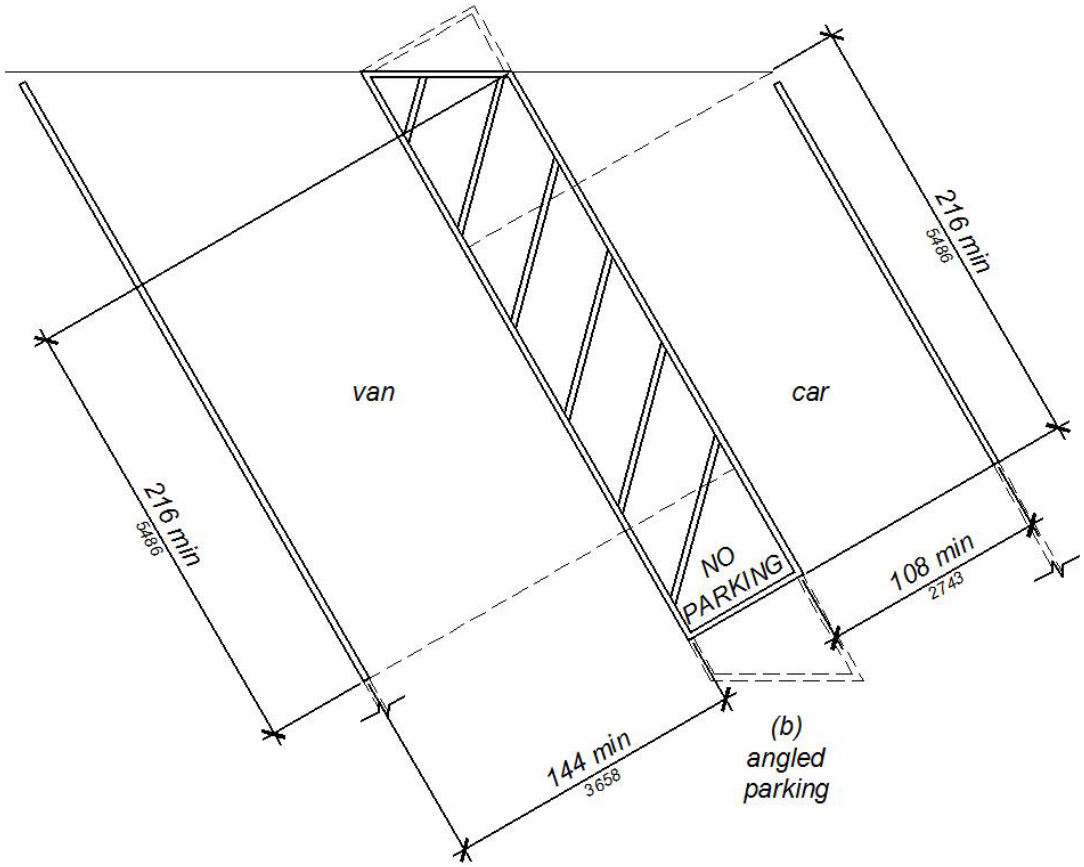

Figure *11B*-502.2
Vehicle Parking Spaces

***11B*-502.3 Access aisle.** Access aisles serving parking spaces shall comply with *Section 11B*-502.3. Access aisles shall adjoin an accessible route. Two parking spaces shall be permitted to share a common access aisle.

USDOJ

Advisory 11B-502.3 Access aisle. Accessible routes must connect parking spaces to accessible entrances. In parking facilities where the accessible route must cross vehicular traffic lanes, marked crossings enhance pedestrian safety, particularly for people using wheelchairs and other mobility aids. Where possible, it is preferable that the accessible route not pass behind parked vehicles. ■

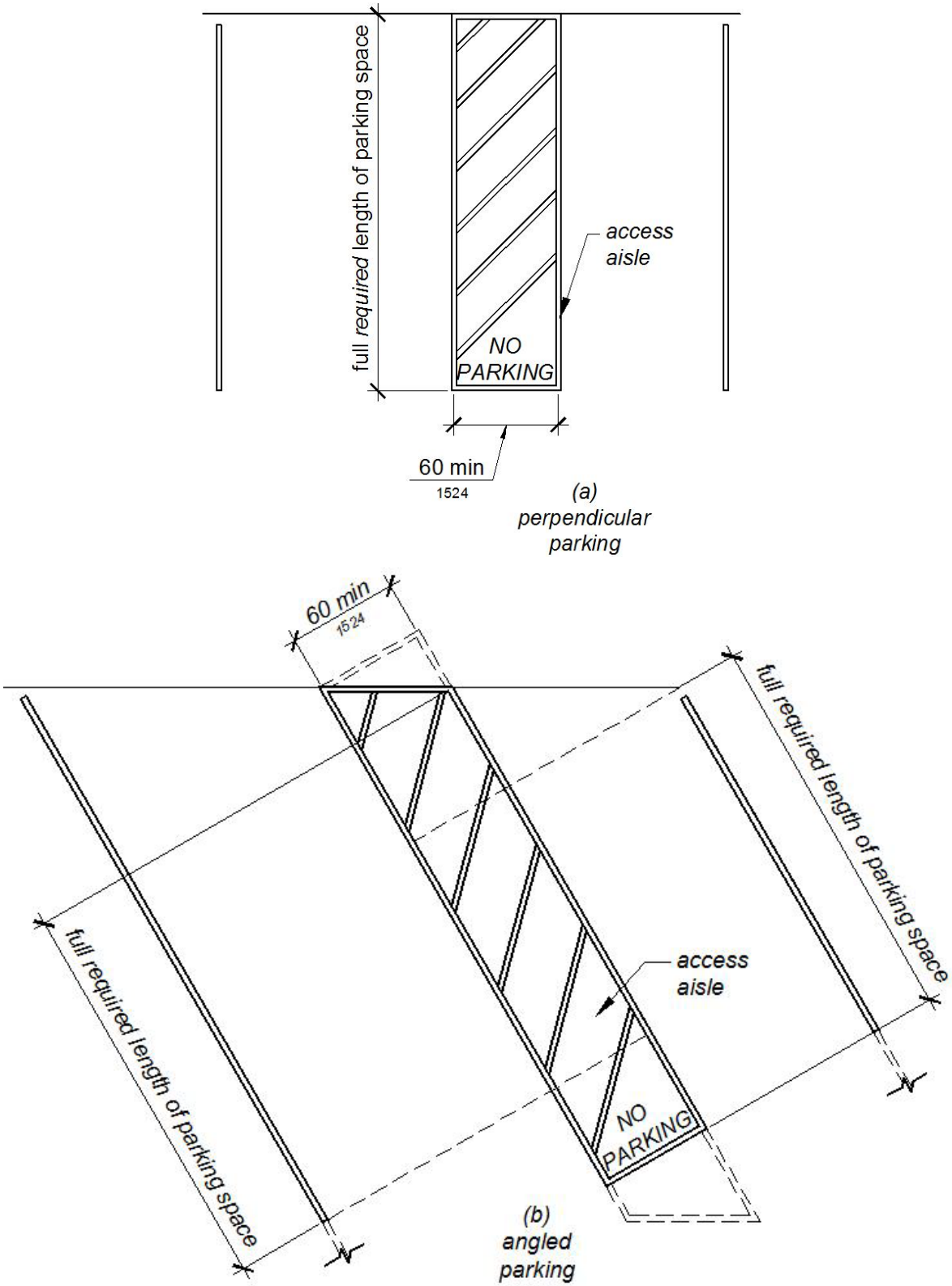

Figure *11B*-502.3
Parking Space Access Aisle

***11B*-502.3.1 Width.** Access aisles serving car and van parking spaces shall be 60 inches (*1524* mm) wide minimum.

***11B*-502.3.2 Length.** Access aisles shall extend the full *required* length of the parking spaces they serve.

***11B*-502.3.3 Marking.** Access aisles shall be marked *with a blue painted borderline around their perimeter. The area within the blue borderlines shall be marked with hatched lines a maximum of 36 inches (914 mm) on center in a color contrasting with that of the aisle surface, preferably blue or white. The words "NO PARKING" shall be painted on the surface within each access aisle in white letters a minimum of 12 inches (305 mm) in height and located to be visible from the adjacent vehicular way. Access aisle markings may extend beyond the minimum required length.*

DSA

Advisory 11B-502.3.3 Marking. The requirement that the hatching at the loading and unloading access aisle be a suitable contrasting color to the parking space is intended to ensure that the hatching is visually distinct from the background to which it is applied, and thus can be more easily seen. As hatching is generally recognized as a no-parking area, this difference in contrast assists drivers by providing a conspicuous visual deterrent to parking in the loading and unloading access aisle.

Asphalt is often the parking surface material used at accessible parking spaces. Asphalt is generally considered to be fairly dark in appearance. In order to provide a suitable contrasting color at the hatched area of the loading and unloading access aisle, a light color hatching should be used at locations where asphalt is the parking surface material. Although white paint is preferred (and traditionally the color most often used), its use is not mandatory under the California Building Code (CBC).

In order to provide a suitable contrast at the hatched area of the loading and unloading access aisle in locations where light concrete is used as the parking surface material (such as at concrete parking garages), a dark color hatching should be used. Although blue paint is preferred, its use is not mandatory under the California Building Code (CBC). ■

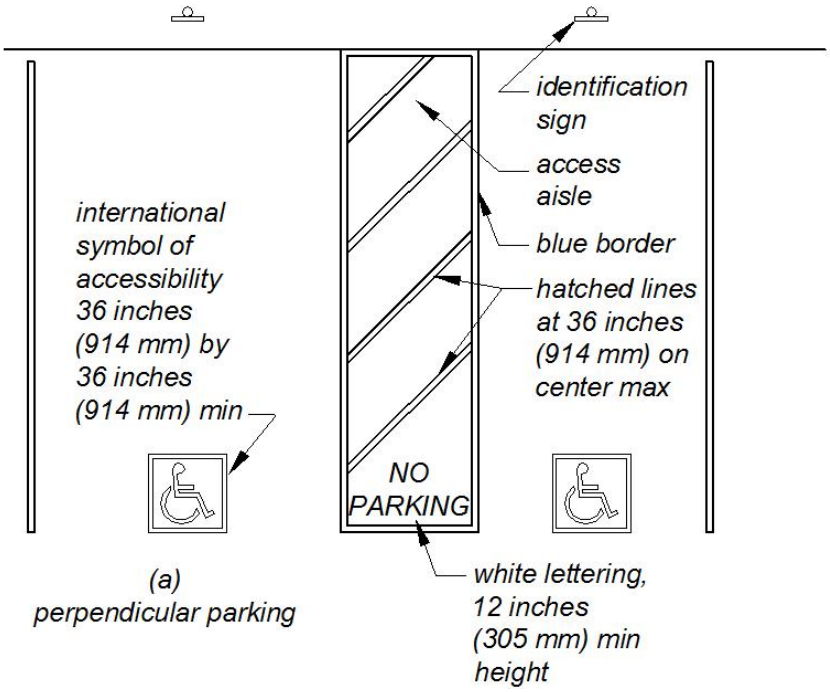

(a)
perpendicular parking

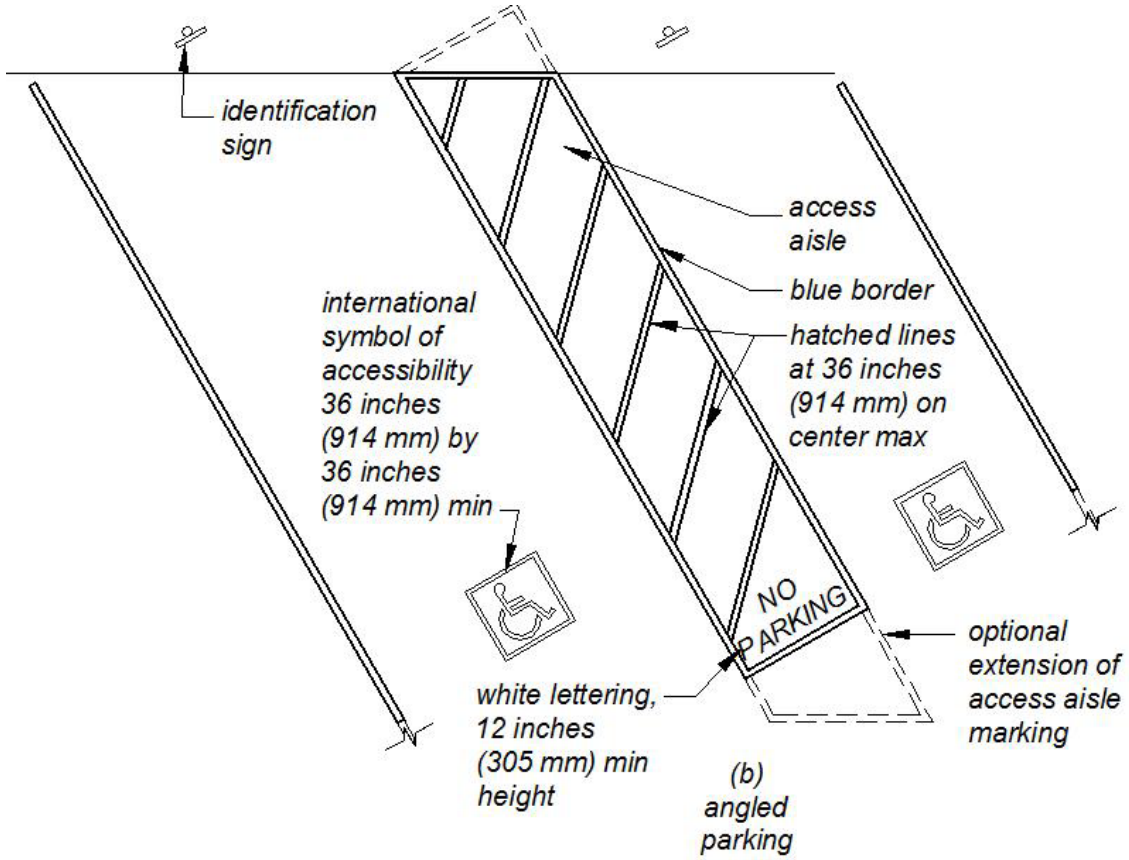

Figure 11B-502.3.3
Angled and Perpendicular Parking Identification

***11B*-502.3.4 Location.** Access aisles shall not overlap the vehicular way. Access aisles shall be permitted to be placed on either side of the parking space except for van parking spaces which shall have access aisles located on the passenger side of the parking spaces.

USDOJ

Advisory 11B-502.3.4 Location. Wheelchair lifts typically are installed on the passenger side of vans. Many drivers, especially those who operate vans, find it more difficult to back into parking spaces than to back out into comparatively unrestricted vehicular lanes. Where a van and car share an access aisle, the van space must be located with the access aisle on the passenger side of the van space. ■

***11B*-502.4 Floor or ground surfaces.** Parking spaces and access aisles serving them shall comply with *Section 11B*-302. Access aisles shall be at the same level as the parking spaces they serve. Changes in level are not permitted.

Exception: Slopes not steeper than 1:48 shall be permitted.

USDOJ

Advisory 11B-502.4 Floor or ground surfaces. Access aisles are required to be nearly level in all directions to provide a surface for wheelchair transfer to and from vehicles. The exception allows sufficient slope for drainage. Built-up curb ramps are not permitted to project into access aisles and parking spaces because they would create slopes greater than 1:48.

■

DSA

Advisory 11B-502.4 Floor or ground surfaces. Accessible parking spaces and access aisles are required to be level (maximum 1:48 slope) in all directions to provide a surface for wheelchair transfer to and from vehicles. The access aisle needs to be adjacent to, and the same required length as the accessible space it serves. Where two parking stalls share the same access aisle, a full depth aisle is required; in diagonal parking, the geometric layout will require additional access aisle depth to satisfy the loading area for both of the adjacent parking stalls as indicated in Figure 11B-502.3.3. ■

***11B*-502.5 Vertical clearance.** Parking *spaces,* access aisles and vehicular routes serving them shall provide a vertical clearance of 98 inches (*2489* mm) minimum.

USDOJ

Advisory 11B-502.5 Vertical clearance. Signs provided at entrances to parking facilities informing drivers of clearances and the location of van accessible parking spaces can provide useful customer assistance. ■

***11B*-502.6 Identification.** Parking space identification signs shall include the International Symbol of Accessibility complying with *Section 11B*-703.7.2.1. Signs identifying van parking spaces shall contain *additional language or an additional sign with* the designation "van accessible." Signs shall be 60 inches (*1524* mm) minimum above the finish floor or ground surface measured to the bottom of the sign.

Exception: *Signs located within an accessible route shall be a minimum of 80 inches (2032 mm) above the finish floor or ground surface measured to the bottom of the sign.*

USDOJ

Advisory 11B-502.6 Identification. The required "van accessible" designation is intended to be informative, not restrictive, in identifying those spaces that are better suited for van use. Enforcement of motor vehicle laws, including parking privileges, is a local matter. ■

DSA

Advisory 11B-502.6 Identification. This section requires that an additional "van accessible" sign or additional language be posted below the International Symbol of Accessibility when designating an accessible parking space that will accommodate a van. A single parking sign incorporating both the International Symbol of Accessibility and the language "van accessible" may be used. ■

11B-502.6.1 Finish and size. *Parking identification signs shall be reflectorized with a minimum area of 70 square inches (45161 mm^2).*

11B-502.6.2 Minimum fine. *Additional language or an additional sign below the International Symbol of Accessibility shall state "Minimum Fine $250."*

11B-502.6.3 Location. *A parking space identification sign shall be visible from each parking space. Signs shall be permanently posted either immediately adjacent to the parking space or within the*

projected parking space width at the head end of the parking space. Signs may also be permanently posted on a wall at the interior end of the parking space.

11B-502.6.4 Marking. *Each accessible car and van space shall have surface identification complying with either Section 11B-502.6.4.1 or 11B-502.6.4.2.*

11B-502.6.4.1 *The parking space shall be marked with an International Symbol of Accessibility complying with Section 11B-703.7.2.1 in white on a blue background a minimum 36 inches wide by 36 inches high (914 mm x 914 mm). The centerline of the International Symbol of Accessibility shall be a maximum of 6 inches (152 mm) from the centerline of the parking space, its sides parallel to the length of the parking space and its lower corner at, or lower side aligned with, the end of the parking space length.*

11B-502.6.4.2 *The parking space shall be outlined or painted blue and shall be marked with an International Symbol of Accessibility complying with Section 11B-703.7.2.1 a minimum 36 inches wide by 36 inches high (914 mm x 914 mm) in white or a suitable contrasting color. The centerline of the International Symbol of Accessibility shall be a maximum of 6 inches (152 mm) from the centerline of the parking space, its sides parallel to the length of the parking space and its lower corner at, or lower side aligned with, the end of the parking space.*

***11B*-502.7 Relationship to accessible routes.** Parking spaces and access aisles shall be designed so that cars and vans, when parked, cannot obstruct the required clear width of adjacent accessible routes.

USDOJ

Advisory 11B-502.7 Relationship to accessible routes. Wheel stops are an effective way to prevent vehicle overhangs from reducing the clear width of accessible routes. ■

11B-502.7.1 Arrangement. *Parking spaces and access aisles shall be designed so that persons using them are not required to travel behind parking spaces other than to pass behind the parking space in which they parked.*

DSA

Advisory 11B-502.7.1 Arrangement. Accessible parking spaces located so that the accessible route passes behind parked vehicles create a safety hazard, especially for wheelchair users. Wheelchair users traveling behind parked vehicles may be obscured from the view of drivers backing out of parking spaces, especially when passing behind high-profile vehicles. This section requires that persons with disabilities not be required to travel behind parking spaces other than the one in which they have parked. ■

11B-502.7.2 Wheel stops. *A curb or wheel stop shall be provided if required to prevent encroachment of vehicles over the required clear width of adjacent accessible routes.*

11B-502.8 Additional signage. *An additional sign shall be posted either; 1) in a conspicuous place at each entrance to an off-street parking facility or 2) immediately adjacent to on-site accessible parking and visible from each parking space.*

11B-502.8.1 Size. *The additional sign shall not be less than 17 inches (432 mm) wide by 22 inches (559 mm) high.*

11B-502.8.2 Lettering. *The additional sign shall clearly state in letters with a minimum height of 1 inch (25 mm) the following:*

"Unauthorized vehicles parked in designated accessible spaces not displaying distinguishing placards or special license plates issued for persons with disabilities will be towed away at the owner's expense. Towed vehicles may be reclaimed at: _____ or by telephoning _____."

Blank spaces shall be filled in with appropriate information as a permanent part of the sign.

***11B*-503 Passenger *drop-off and* loading zones**

***11B*-503.1 General.** Passenger *drop-off and* loading zones shall comply with *Section 11B*-503.

***11B*-503.2 Vehicle pull-up space.** Passenger *drop-off and* loading zones shall provide a vehicular pull-up space 96 inches (*2438* mm) wide minimum and 20 feet (*6096* mm) long minimum.

***11B*-503.3 Access aisle.** Passenger *drop-off and* loading zones shall provide access aisles complying with *Section 11B*-503 adjacent *and parallel* to the vehicle pull-up space. Access aisles shall adjoin an accessible route and shall not overlap the vehicular way.

***11B*-503.3.1 Width.** Access aisles serving vehicle pull-up spaces shall be 60 inches (*1524* mm) wide minimum.

***11B*-503.3.2 Length.** Access aisles shall extend the full length of the vehicle pull-up spaces they serve.

***11B*-503.3.3 Marking.** Access aisles shall be marked *with a painted borderline around their perimeter. The area within the borderlines shall be marked with hatched lines a maximum of 36 inches (914 mm) on center in a color contrasting with that of the aisle surface.*

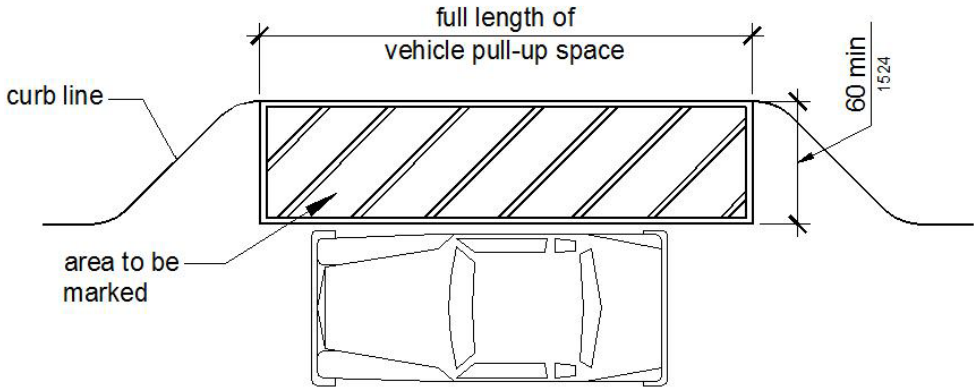

Figure *11B*-503.3
Passenger *Drop-Off and* Loading Zone Access Aisle

***11B*-503.4 Floor and ground surfaces.** Vehicle pull-up spaces and access aisles serving them shall comply with *Section 11B*-302. Access aisles shall be at the same level as the vehicle pull-up space they serve. Changes in level are not permitted.

Exception: Slopes not steeper than 1:48 shall be permitted.

***11B*-503.5 Vertical clearance.** Vehicle pull-up spaces, access aisles serving them, and a vehicular route from an entrance to the passenger loading zone and from the passenger loading zone to a vehicular exit shall provide a vertical clearance of 114 inches (*2896* mm) minimum.

DSA

Advisory 11B-503.5 Vertical clearance. The minimum vertical clearance at designated passenger drop-off and loading zones, and along at least one vehicle access route to the area from site entrances and exits, is 114 inches. This differs from the 98 inch vertical clearance requirement for accessible parking spaces. Commercial vans used for accessible transit may be taller than passenger vans. ■

11B-503.6 Identification. *Each passenger loading zone designated for persons with disabilities shall be identified with a reflectorized sign complying with Section 11B-703.5. It shall be permanently posted immediately adjacent to and visible from the passenger loading zone stating "Passenger Loading Zone Only" and including the International Symbol of Accessibility complying with Section 11B-703.7.2.1 in white on a dark blue background.*

***11B*-504 Stairways**

***11B*-504.1 General.** Stairs shall comply with *Section 11B*-504.

***11B*-504.2 Treads and risers.** All steps on a flight of stairs shall have uniform riser heights and uniform tread depths. Risers shall be 4 inches (*102* mm) high minimum and 7 inches (*178* mm) high maximum. Treads shall be 11 inches (*279* mm) deep minimum.

Exception: *Curved stairways with winder treads are permitted at stairs which are not part of a required means of egress.*

***11B*-504.3 Open risers.** Open risers are not permitted.

Exceptions:

1. *On exterior stairways, an opening of not more than $^{1}/_{2}$ inch (12.7 mm) may be permitted between the base of the riser and the tread.*

2. *On exterior stairways, risers constructed of grating containing openings of not more than $^{1}/_{2}$ inch (12.7 mm) may be permitted.*

***11B*-504.4 Tread surface.** Stair treads shall comply with *Section 11B*-302. Changes in level are not permitted.

Exception: Treads shall be permitted to have a slope not steeper than 1:48.

11B-504.4.1 Contrasting stripe. *Interior stairs shall have the upper approach and lower tread marked by a stripe providing clear visual contrast. Exterior stairs shall have the upper approach and all treads marked by a stripe providing clear visual contrast.*

The stripe shall be a minimum of 2 inches (51 mm) wide to a maximum of 4 inches (102 mm) wide placed parallel to, and not more than 1 inch (25 mm) from, the nose of the step or upper approach. The stripe shall extend the full width of the step or upper approach and shall be of material that is at least as slip resistant as the other treads of the stair. A painted stripe shall be acceptable. Grooves shall not be used to satisfy this requirement.

DSA

Advisory 11B-504.4.1 Contrasting stripe. Some designers propose to provide a group of tooled grooves in lieu of the contrasting color. While grooves do provide shadow lines in some lighting conditions, these shadows cannot be relied upon under all lighting conditions. In addition, the spaces between the grooves do not provide any contrast. ■

***11B*-504.5 Nosings.** The radius of curvature at the leading edge of the tread shall be ½ inch (*12.7* mm) maximum. Nosings that project beyond risers shall have the underside of the leading edge curved or beveled. Risers shall be permitted to slope under the tread at an angle of 30 degrees maximum from vertical. The permitted projection of the nosing shall extend *1¼ inches (32 mm*) maximum over the tread below.

> ***Exception:*** *In existing buildings there is no requirement to retroactively alter existing nosing projections of 1½ inches (38 mm) which were constructed in compliance with the building code in effect at the time of original construction.*

DSA

Advisory 11B-504.5 Nosings. While Chapter 10 may allow larger radius of curvature at the leading edge (nosing) of the tread, this radius must be no larger than ½ inch to comply with **both** Chapter 10 and Chapter 11B requirements.

Additionally, because it is possible to catch the top of one's shoe on the underside of stair nosings, access compliance regulations require the underside of nosings to be free of abrupt changes – a beveled slope or non-square underside. ■

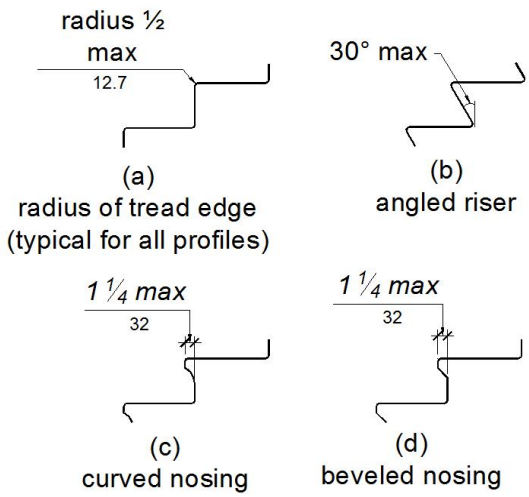

Figure *11B*-504.5
Stair Nosings

***11B*-504.6 Handrails.** Stairs shall have handrails complying with *Section 11B*-505.

***11B*-504.7 Wet conditions.** Stair treads and landings subject to wet conditions shall be designed to prevent the accumulation of water.

11B-504.8 Floor identification. *Floor identification signs required by Chapter 10, Section 1022.9 complying with Sections 11B-703.1, 11B-703.2, 11B-703.3 and 11B-703.5 shall be located at the landing of each floor level, placed adjacent to the door on the latch side, in all enclosed stairways in buildings two or more stories in height to identify the floor level. At the exit discharge level, the sign shall include a raised five pointed star located to the left of the identifying floor level. The outside diameter of the star shall be the same as the height of the raised characters.*

***11B*-505 Handrails**

***11B*-505.1 General.** Handrails provided along walking surfaces complying with *Section 11B*-403, required at ramps complying with *Section 11B*-405, and required at stairs complying with *Section 11B*-504 shall comply with *Section 11B*-505.

USDOJ

Advisory 11B-505.1 General. Handrails are not required on walking surfaces with running slopes less than 1:20. However, handrails are required to comply with Section 11B-505 when they are provided on walking surfaces with running slopes less than 1:20 (see Section 11B-403.6). Sections 11B-505.2, 11B-505.3, and 11B-505.10 do not apply to handrails provided on walking surfaces with running slopes less than 1:20 as these sections only reference requirements for ramps and stairs. ■

***11B*-505.2 Where required.** Handrails shall be provided on both sides of stairs and ramps.

Exceptions:

1. In assembly areas, handrails shall not be required on both sides of aisle ramps where a handrail is provided at either side or within the aisle width.

2. *Curb ramps do not require handrails.*

3. *At door landings, handrails are not required when the ramp run is less than 6 inches (152 mm) in rise or 72 inches (1829 mm) in length.*

***11B*-505.3 Continuity.** Handrails shall be continuous within the full length of each stair flight or ramp run. Inside handrails on switchback or dogleg stairs and ramps shall be continuous between flights or runs.

Exception: In assembly areas, *ramp* handrails *adjacent to seating or within the aisle width* shall not be required to be continuous in aisles serving seating.

***11B*-505.4 Height.** Top of gripping surfaces of handrails shall be 34 inches (*864* mm) minimum and 38 inches (965 mm) maximum vertically above walking surfaces, stair nosings, and ramp surfaces. Handrails shall be at a consistent height above walking surfaces, stair nosings, and ramp surfaces.

USDOJ

Advisory 11B-505.4 Height. The requirements for stair and ramp handrails in this chapter are for adults. When children are the principal users in a building or facility (e.g., elementary schools), a second set of handrails at an appropriate height can assist them and aid in preventing accidents. A maximum height of 28 inches (710 mm) measured to the top of the gripping surface from the ramp surface or stair nosing is recommended for handrails designed for children. Sufficient vertical clearance between upper and lower handrails, 9 inches (230 mm) minimum, should be provided to help prevent entrapment. ■

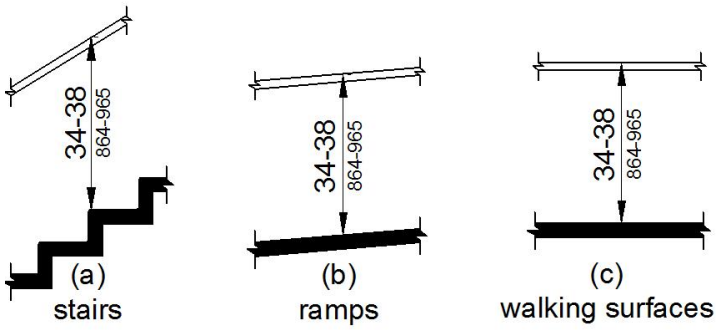

Figure *11B*-505.4
Handrail Height

***11B*-505.5 Clearance.** Clearance between handrail gripping surfaces and adjacent surfaces shall be 1½ inches (38 mm) minimum. *Handrails may be located in a recess if the recess is 3 inches (76 mm) maximum deep and 18 inches (457 mm) minimum clear above the top of the handrail.*

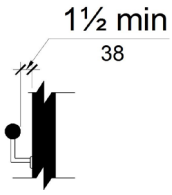

Figure *11B*-505.5
Handrail Clearance

***11B*-505.6 Gripping surface.** Handrail gripping surfaces shall be continuous along their length and shall not be obstructed along their tops or sides. The bottoms of handrail gripping surfaces shall not be obstructed for more than 20 percent of their length. Where provided, horizontal projections shall occur 1½ inches (38 mm) minimum below the bottom of the handrail gripping surface.

Exceptions:

1. Where handrails are provided along walking surfaces with slopes not steeper than 1:20, the bottoms of handrail gripping surfaces shall be permitted to be obstructed along their entire length where they are integral to crash rails or bumper guards.

2. The distance between horizontal projections and the bottom of the gripping surface shall be permitted to be reduced by ⅛ inch (3.2 mm) for each ½ inch (*12.7* mm) of additional handrail perimeter dimension that exceeds 4 inches (*102* mm).

USDOJ

Advisory 11B-505.6 Gripping surface. People with disabilities, older people, and others benefit from continuous gripping surfaces that permit users to reach the fingers outward or downward to grasp the handrail, particularly as the user senses a loss of equilibrium or begins to fall. ■

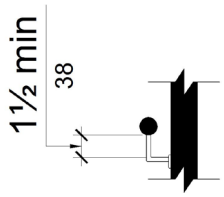

Figure *11B*-505.6
Horizontal Projections Below Gripping Surface

***11B*-505.7 Cross section.** Handrail gripping surfaces shall have a cross section complying with *Section 11B*-505.7.1 or *11B*-505.7.2.

***11B*-505.7.1 Circular cross section.** Handrail gripping surfaces with a circular cross section shall have an outside diameter of 1¼ inches (32 mm) minimum and 2 inches (51 mm) maximum.

***11B*-505.7.2 Non-circular cross sections.** Handrail gripping surfaces with a non-circular cross section shall have a perimeter dimension of 4 inches (*102* mm) minimum and 6¼ inches (*159* mm) maximum, and a cross-section dimension of 2 ¼ inches (57 mm) maximum.

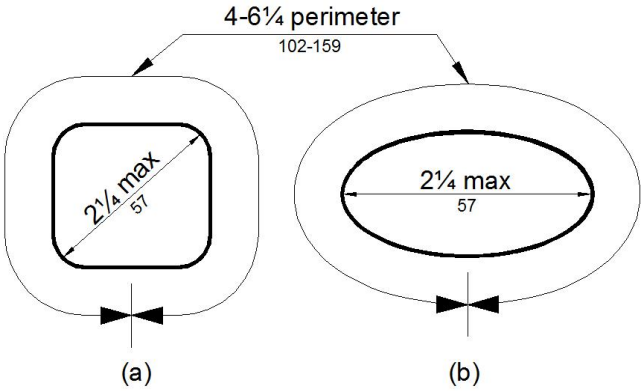

Figure *11B*-505.7.2
Handrail Non-Circular Cross Section

***11B*-505.8 Surfaces.** Handrail gripping surfaces and any surfaces adjacent to them shall be free of sharp or abrasive elements and shall have rounded edges.

***11B*-505.9 Fittings.** Handrails shall not rotate within their fittings.

***11B*-505.10 Handrail extensions.** Handrail gripping surfaces shall extend beyond and in the same direction of stair flights and ramp runs in accordance with *Section 11B*-505.10.

Exceptions:

1. Extensions shall not be required for continuous handrails at the inside turn of switchback or dogleg stairs and ramps.

2. In assembly areas, extensions shall not be required for ramp handrails in aisles serving seating where the handrails are discontinuous to provide access to seating and to permit crossovers within aisles.

3. In alterations, *where the extension of the handrail in the direction of stair flight or ramp run would create a hazard, the extension of the handrail may be turned 90 degrees from the direction of stair flight or ramp run.*

***11B*-505.10.1 Top and bottom extension at ramps.** Ramp handrails shall extend horizontally above the landing for 12 inches (305 mm) minimum beyond the top and bottom of ramp runs. Extensions shall return to a wall, guard, or the landing surface, or shall be continuous to the handrail of an adjacent ramp run.

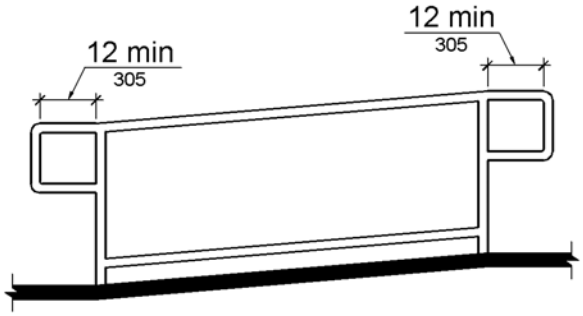

Figure *11B*-505.10.1
Top and Bottom Handrail Extension at Ramps

***11B*-505.10.2 Top extension at stairs.** At the top of a stair flight, handrails shall extend horizontally above the landing for 12 inches (305 mm) minimum beginning directly above the first riser nosing. Extensions shall return to a wall, guard, or the landing surface, or shall be continuous to the handrail of an adjacent stair flight.

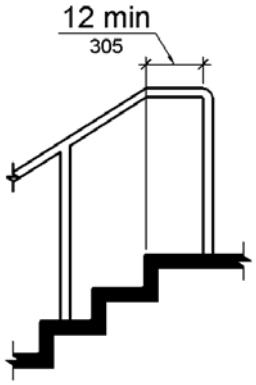

Figure *11B*-505.10.2
Top Handrail Extension at Stairs

***11B*-505.10.3 Bottom extension at stairs.** At the bottom of a stair flight, handrails shall extend at the slope of the stair flight for a horizontal distance equal to one tread depth beyond the last riser nosing. *The horizontal extension of a handrail shall be 12 inches (305 mm) long minimum and a height equal to that of the sloping portion of the handrail as measured above the stair nosings.* Extension shall return to a wall, guard, or the landing surface, or shall be continuous to the handrail of an adjacent stair flight.

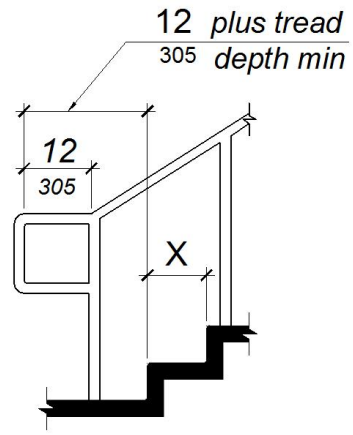

Note: X = tread depth

Figure *11B*-505.10.3
Bottom Handrail Extension at Stairs

***11B*-601 General**

***11B*-601.1 Scope.** The provisions of *Division* 6 shall apply where required by *Division* 2 or where referenced by a requirement in this *chapter*.

***11B*-602 Drinking fountains**

***11B*-602.1 General.** Drinking fountains shall comply with *Sections 11B*-307 and *11B*-602.

***11B*-602.2 Clear floor space.** Units shall have a clear floor or ground space complying with *Section 11B*-305 positioned for a forward approach and centered on the unit. Knee and toe clearance complying with *Section 11B*-306 shall be provided.

> **Exception:** A parallel approach complying with *Section 11B*-305 shall be permitted at units for children's use where the spout is 30 inches (*762* mm) maximum above the finish floor or ground and is 3½ inches (*89* mm) maximum from the front edge of the unit, including bumpers.

***11B*-602.3 Operable parts.** Operable parts shall comply with *Section 11B*-309. *The flow of water shall be activated by a manually operated system that is front mounted or side mounted and located within 6 inches (152 mm) of the front edge of the fountain or an automatic electronically controlled device.*

***11B*-602.4 Spout height.** Spout outlets shall be 36 inches (*914* mm) maximum above the finish floor or ground.

***11B*-602.5 Spout location.** The spout shall be located 15 inches (*381* mm) minimum from the vertical support and 5 inches (*127* mm) maximum from the front edge of the unit, including bumpers.

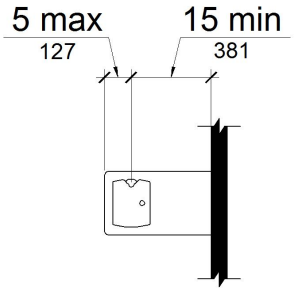

Figure *11B*-602.5
Drinking Fountain Spout Location

***11B*-602.6 Water flow.** The spout shall provide a flow of water 4 inches (*102* mm) high minimum and shall be located 5 inches (*127* mm) maximum from the front of the unit. The angle of the water stream shall be measured horizontally relative to the front face of the unit. Where spouts are located less than 3 inches (*76* mm) of the front of the unit, the angle of the water stream shall be 30 degrees maximum. Where spouts are located between 3 inches (*76* mm) and 5 inches (*127* mm) maximum from the front of the unit, the angle of the water stream shall be 15 degrees maximum.

> USDOJ
>
> **Advisory 11B-602.6 Water flow.** The purpose of requiring the drinking fountain spout to produce a flow of water 4 inches (100 mm) high minimum is so that a cup can be inserted under the flow of water to provide a drink of water for an individual who, because of a disability, would otherwise be incapable of using the drinking fountain. ■

***11B*-602.7 Drinking fountains for standing persons.** Spout outlets of drinking fountains for standing persons shall be 38 inches (965 mm) minimum and 43 inches (*1092* mm) maximum above the finish floor or ground.

11B-602.8 Depth. *Wall- and post-mounted cantilevered drinking fountains shall be 18 inches (457 mm) minimum and 19 inches (483 mm) maximum in depth.*

11B-602.9 Pedestrian protection. *All drinking fountains shall either be located completely within alcoves, positioned completely between wing walls, or otherwise positioned so as not to encroach into pedestrian ways. The protected area within which a drinking fountain is located shall be 32 inches (813 mm) wide minimum and 18 inches (457 mm) deep minimum, and shall comply with Section 11B-305.7. When used, wing walls or barriers shall project horizontally at least as far as the drinking fountain and to within 6 inches (152 mm) vertically from the floor or ground surface.*

***11B*-603 Toilet and bathing rooms**

***11B*-603.1 General.** Toilet and bathing rooms shall comply with *Section 11B*-603.

***11B*-603.2 Clearances.** Clearances shall comply with *Section 11B*-603.2.

***11B*-603.2.1 Turning space.** Turning space complying with *Section 11B*-304 shall be provided within the room.

***11B*-603.2.2 Overlap.** Required clear floor spaces, clearance at fixtures, and turning space shall be permitted to overlap.

***11B*-603.2.3 Door swing.** Doors shall not swing into the clear floor space or clearance required for any fixture. *Other than the door to the accessible water closet compartment, a door, in any position, may encroach into the turning space by 12 inches (305 mm) maximum.*

Exceptions:

1. ***Reserved.***

2. Where the toilet room or bathing room is for individual use and a clear floor space complying with *Section 11B*-305.3 is provided within the room beyond the arc of the door swing, doors shall be permitted to swing into the clear floor space or clearance required for any fixture.

DSA

Advisory 11B-603.2.3 Door swing. The door to the accessible water closet compartment may swing over the turning space without limitation. Other doors may swing over the turning space up to 12 inches. ■

***11B*-603.3 Mirrors.** Mirrors located above lavatories or countertops shall be installed with the bottom edge of the reflecting surface 40 inches (*1016* mm) maximum above the finish floor or ground. Mirrors not located above lavatories or countertops shall be installed with the bottom edge of the reflecting surface 35 inches (*889* mm) maximum above the finish floor or ground.

USDOJ

Advisory 11B-603.3 Mirrors. A single full-length mirror can accommodate a greater number of people, including children. In order for mirrors to be usable by people who are ambulatory and people who use wheelchairs, the top edge of mirrors should be 74 inches (1880 mm) minimum from the floor or ground. ■

***11B*-603.4 Coat hooks, shelves *and medicine cabinets*.** Coat hooks shall be located within one of the reach ranges specified in *Section 11B*-308. Shelves shall be located 40 inches (*1016* mm) minimum and 48 inches (*1219* mm) maximum above the finish floor. *Medicine cabinets shall be located with a usable shelf no higher than 44 inches (1118 mm) maximum above the finish floor.*

11B-603.5 Accessories. *Where towel or sanitary napkin dispensers, waste receptacles, or other accessories are provided in toilet facilities, at least one of each type shall be located on an accessible route. All operable parts, including coin slots, shall be 40 inches (1016 mm) maximum above the finish floor.*

Exception: *Baby changing tables are not required to comply with Section 11B-603.5.*

11B-603.6 Guest room toilet and bathing rooms. *Toilet and bathing rooms within guest rooms that are not required to provide mobility features complying with Section 11B-806.2 shall provide all toilet and bathing fixtures in a location that allows a person using a wheelchair measuring 30 inches by 48 inches (762 mm by 1219 mm) to touch the wheelchair to any lavatory, urinal, water closet, tub, sauna, shower stall and any other similar sanitary installation, if provided.*

***11B*-604 Water closets and toilet compartments**

***11B*-604.1 General.** Water closets and toilet compartments shall comply with *Sections 11B*-604.2 through *11B*-604.8.

Exception: Water closets and toilet compartments for children's use shall be permitted to comply with *Section 11B*-604.9.

***11B*-604.2 Location.** The water closet shall be positioned with a wall or partition to the rear and to one side. The centerline of the water closet shall be *17 inches (432 mm)* minimum to 18 inches (*457* mm) maximum from the side wall or partition, except that the water closet shall be 17 inches (*432* mm) minimum and 19 inches (*483* mm) maximum from the side wall or partition in the ambulatory accessible toilet compartment specified in *Section 11B*-604.8.2. Water closets shall be arranged for a left-hand or right-hand approach.

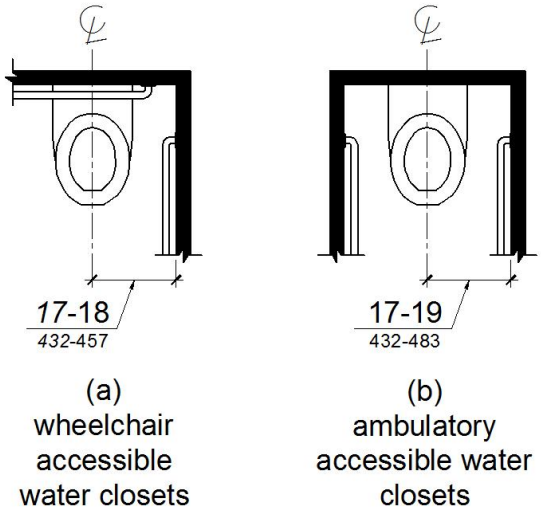

Figure *11B*-604.2
Water Closet Location

***11B*-604.3 Clearance.** Clearances around water closets and in toilet compartments shall comply with *Section 11B*-604.3.

***11B*-604.3.1 Size.** Clearance around a water closet shall be 60 inches (*1524* mm) minimum measured perpendicular from the side wall and 56 inches (*1422* mm) minimum measured perpendicular from the rear wall. *A minimum 60 inches (1524 mm) wide and 48 inches (1219 mm) deep maneuvering space shall be provided in front of the water closet.*

> ***Exception:** In residential dwelling units complying with Section 11B-233.3.1.1, maneuvering space in front of the water closet shall be a minimum 60 inches (1524 mm) wide and 36 inches (914 mm) deep.*

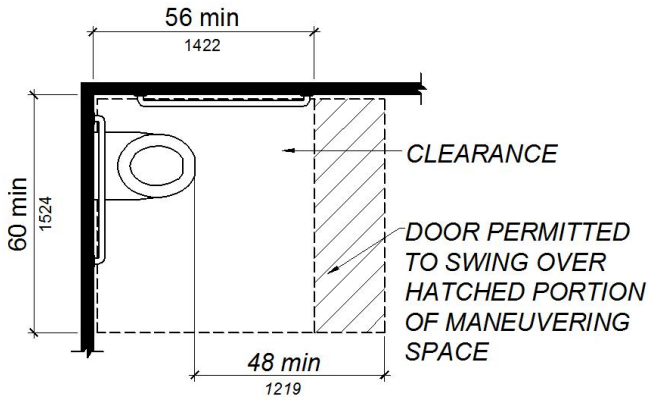

Figure *11B*-604.3.1
Size of Clearance at Water Closets

***11B*-604.3.2 Overlap.** The required clearance around the water closet shall be permitted to overlap the water closet, associated grab bars, dispensers, sanitary napkin disposal units, coat hooks, shelves, accessible routes, clear floor space and clearances required at other fixtures, and the turning space. No other fixtures or obstructions shall be located within the required water closet clearance.

> **Exception:** In residential dwelling units, a lavatory complying with *Section 11B*-606 shall be permitted on the rear wall 18 inches (*457* mm) minimum from the water closet centerline where the clearance at the water closet is 66 inches (*1676* mm) minimum measured perpendicular from the rear wall.

USDOJ

Advisory 11B-604.3.2 Overlap. When the door to the toilet room is placed directly in front of the water closet, the water closet cannot overlap the required maneuvering clearance for the door inside the room. ■

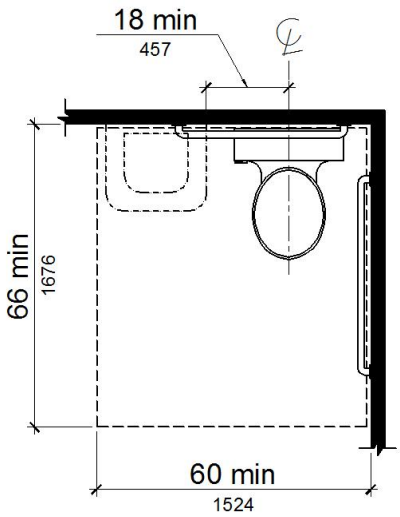

Figure *11B*-604.3.2 (Exception)
Overlap of Water Closet Clearance in Residential Dwelling Units

***11B*-604.4 Seats.** The seat height of a water closet above the finish floor shall be 17 inches (*432* mm) minimum and 19 inches (*483* mm) maximum measured to the top of the seat. Seats shall not be sprung to return to a lifted position. *Seats shall be 2 inches (51 mm) high maximum.*

Exceptions:

1. ***Reserved***.

2. In residential dwelling units, the height of water closets shall be permitted to be 15 inches (*381* mm) minimum and 19 inches (*483* mm) maximum above the finish floor measured to the top of the seat.

3. *A 3-inch (76 mm) high seat shall be permitted only in alterations where the existing fixture is less than 15 inches (381 mm) high.*

***11B*-604.5 Grab bars.** Grab bars for water closets shall comply with *Section 11B*-609. Grab bars shall be provided on the side wall closest to the water closet and on the rear wall. *Where separate grab bars are required on adjacent walls at a common mounting height, an L-shaped grab bar meeting the dimensional requirements of Sections 11B-604.5.1 and 11B-604.5.2 shall be permitted.*

Exceptions:

1. ***Reserved.***

2. In residential dwelling units, grab bars shall not be required to be installed in toilet or bathrooms provided that reinforcement has been installed in walls and located so as to permit the installation of grab bars complying with *Section 11B*-604.5.

3. In detention or correction facilities, grab bars shall not be required to be installed in housing or holding cells that are specially designed without protrusions for purposes of suicide prevention.

USDOJ

Advisory 11B-604.5 Grab bars Exception 2. Reinforcement must be sufficient to permit the installation of rear and side wall grab bars that fully meet all accessibility requirements including, but not limited to, required length, installation height, and structural strength. ■

***11B*-604.5.1 Side wall.** The side wall grab bar shall be 42 inches (*1067* mm) long minimum, located 12 inches (305 mm) maximum from the rear wall and extending 54 inches (*1372* mm) minimum from the rear wall *with the front end positioned 24 inches (610 mm) minimum in front of the water closet*.

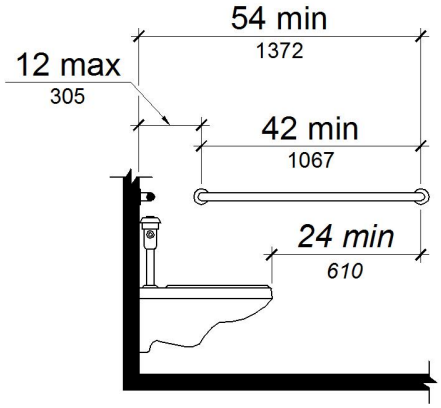

Figure *11B*-604.5.1
Side Wall Grab Bar at Water Closets

***11B*-604.5.2 Rear wall.** The rear wall grab bar shall be 36 inches (*914* mm) long minimum and extend from the centerline of the water closet 12 inches (305 mm) minimum on one side and 24 inches (610 mm) minimum on the other side.

Exceptions:

1. The rear grab bar shall be permitted to be 24 inches (610 mm) long minimum, centered on the water closet, where wall space does not permit a length of 36 inches (*914* mm) minimum due to the location of a recessed fixture adjacent to the water closet.

2. Where an administrative authority requires flush controls for flush valves to be located in a position that conflicts with the location of the rear grab bar, then the rear grab bar shall be permitted to be split or shifted to the open side of the toilet area.

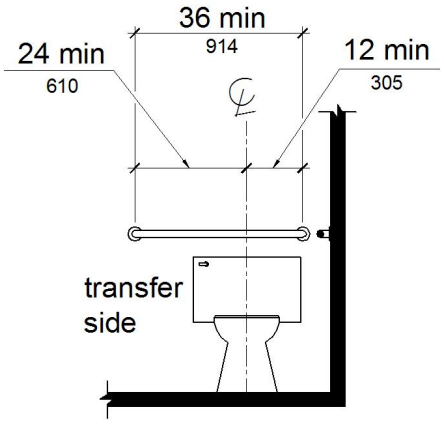

Figure *11B*-604.5.2
Rear Wall Grab Bar at Water Closets

***11B*-604.6 Flush controls.** Flush controls shall be hand operated or automatic. Hand operated flush controls shall comply with *Section 11B*-309 *except they shall be located 44 inches (1118 mm) maximum*

above the floor. Flush controls shall be located on the open side of the water closet except in ambulatory accessible compartments complying with *Section 11B*-604.8.2.

> **USDOJ**
>
> **Advisory 11B-604.6 Flush controls.** If plumbing valves are located directly behind the toilet seat, flush valves and related plumbing can cause injury or imbalance when a person leans back against them. To prevent causing injury or imbalance, the plumbing can be located behind walls or to the side of the toilet; or if approved by the local authority having jurisdiction, provide a toilet seat lid. ■

***11B*-604.7 Dispensers.** Toilet paper dispensers shall comply with *Section 11B*-309.4 and shall be 7 inches (*178* mm) minimum and 9 inches (*229* mm) maximum in front of the water closet measured to the centerline of the dispenser. The outlet of the dispenser shall be *below the grab bar, 19 inches (483 mm) minimum* above the finish floor and shall not be located behind grab bars. Dispensers shall not be of a type that controls delivery or that does not allow continuous paper flow.

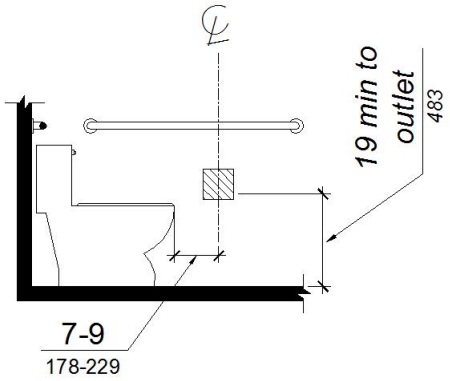

Figure *11B*-604.7
Dispenser Outlet Location

***11B*-604.8 Toilet compartments.** Wheelchair accessible toilet compartments shall meet the requirements of *Sections 11B*-604.8.1 and *11B*-604.8.3. Compartments containing more than one plumbing fixture shall comply with *Section 11B*-603. Ambulatory accessible compartments shall comply with *Sections 11B*-604.8.2 and *11B*-604.8.3.

***11B*-604.8.1 Wheelchair accessible compartments.** Wheelchair accessible compartments shall comply with *Section 11B*-604.8.1.

***11B*-604.8.1.1 Size.** Wheelchair accessible compartments shall be 60 inches (*1524* mm) wide minimum measured perpendicular to the side wall, and 56 inches (*1422* mm) deep minimum for wall hung water closets and 59 inches (*1499* mm) deep minimum for floor mounted water closets measured perpendicular to the rear wall. *Wheelchair accessible compartments shall additionally provide maneuvering space complying with Section 11B-604.8.1.1.1, 11B-604.8.1.1.2, or 11B-604.8.1.1.3, as applicable.* Wheelchair accessible compartments for children's use shall be 60 inches (*1524* mm) wide minimum measured perpendicular to the side wall, and 59 inches (*1499* mm) deep minimum for wall hung and floor mounted water closets measured perpendicular to the rear wall.

USDOJ

Advisory 11B-604.8.1.1 Size. The minimum space required in toilet compartments is provided so that a person using a wheelchair can maneuver into position at the water closet. This space cannot be obstructed by baby changing tables or other fixtures or conveniences, except as specified at Section 11B-604.3.2 (Overlap). If toilet compartments are to be used to house fixtures other than those associated with the water closet, they must be designed to exceed the minimum space requirements. Convenience fixtures such as baby changing tables must also be accessible to people with disabilities as well as to other users. Toilet compartments that are designed to meet, and not exceed, the minimum space requirements may not provide adequate space for maneuvering into position at a baby changing table. ■

11B-604.8.1.1.1 Maneuvering space with in-swinging door. *In a wheelchair accessible compartment with an in-swinging door, a minimum 60 inches (1524 mm) wide by 36 inches (914 mm) deep maneuvering space shall be provided in front of the clearance required in Section 11B-604.8.1.1. See Figures 11B-604.8.1.1.2 (b) and 11B-604.8.1.1.3 (b).*

11B-604.8.1.1.2 Maneuvering space with side-opening door. *In a wheelchair accessible compartment with a door located in the side wall or partition, either in-swinging or out-swinging, a minimum 60 inches (1524 mm) wide and 60 inches (1524 mm) deep maneuvering space shall be provided in front of the water closet. See Figure 11B-604.8.1.1.2.*

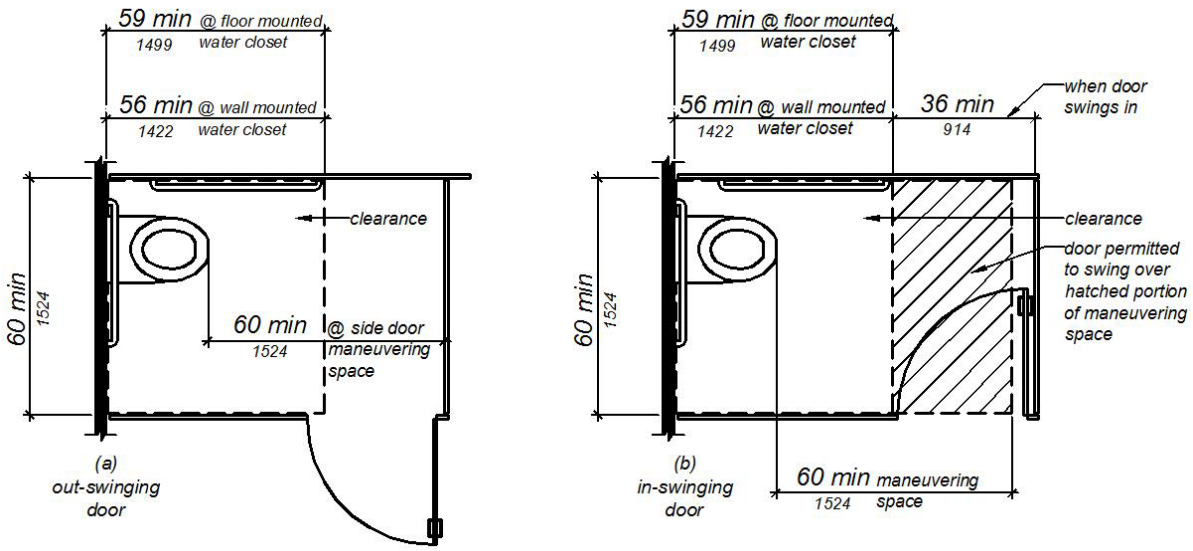

Figure 11B-604.8.1.1.2
Maneuvering Space with Side-Opening Door

11B-604.8.1.1.3 Maneuvering space with end-opening door. *In a wheelchair accessible compartment with a door located in the front wall or partition (facing the water closet), either in-swinging or out-swinging, a minimum 60 inches (1524 mm) wide and 48 inches (1219 mm) deep maneuvering space shall be provided in front of the water closet. See Figure 11B-604.8.1.1.3.*

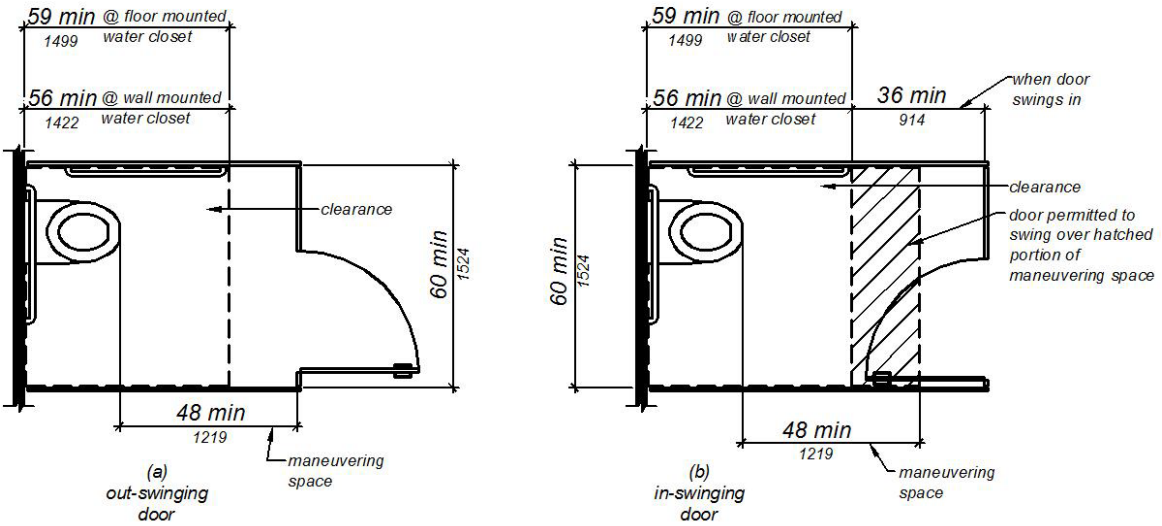

Figure 11B-604.8.1.1.3
Maneuvering Space with End-Opening Door

***11B*-604.8.1.2 Doors.** Toilet compartment doors, including door hardware, shall comply with *Section 11B*-404 except that if the approach is *from the push side* of the compartment door, clearance between the door side of the compartment and any obstruction shall be *48 inches (1219 mm)* minimum *measured perpendicular to the compartment door in its closed position*. Doors shall be located in the front partition or in the side wall or partition farthest from the water closet. Where located in the front partition, the door opening shall be 4 inches (*102* mm) maximum from the side wall or partition farthest from the water closet. Where located in the side wall or partition, the door opening shall be 4 inches (*102* mm) maximum from the front partition. The door shall be self-closing. A door pull complying with *Section 11B*-404.2.7 shall be placed on both sides of the door near the latch. *Doors shall not swing into the clear floor space or clearance required for any fixture. Doors may swing into that portion of maneuvering space which does not overlap the clearance required at a water closet.*

> ***Exception:*** *When located at the side of a toilet compartment, the toilet compartment door opening shall provide a clear width of 34 inches (864 mm) minimum.*

DSA

Advisory 11B-604.8.1.2 Doors. This item describes requirements pertaining to the accessible water closet compartment door and the route to the door.

The door is required to have a latch which is flip-over style, sliding or which otherwise does not require the user to grasp or twist. This is to facilitate latching the door by people with limited hand or finger dexterity.

The last part of this item addresses the required maneuvering space at the compartment door. This space is required to comply with requirements for door maneuvering space in Section 11B-404.2.4, except the space in front of the door shall be no less than 48 inches deep, measured perpendicular to the closed door. Where Figure 11B-404.2.4.1 (f) and (j), specifically allow a 44” minimum maneuvering space perpendicular to doors in general in the closed position, a minimum of 48” must be provided in order to comply with Section 11B-604.8.1.2.

Note that in Figure 11B-404.2.4.1 (c) the front approach requires 12 inches of strike-side clearance on the push side where a door has both a latch and a closer. However, the US

Department of Justice has indicated that a self-closing compartment door with a *gravity hinge* is not considered to be a door with a closer; hence the 12-inch clearance would not be required in this type of design. ■

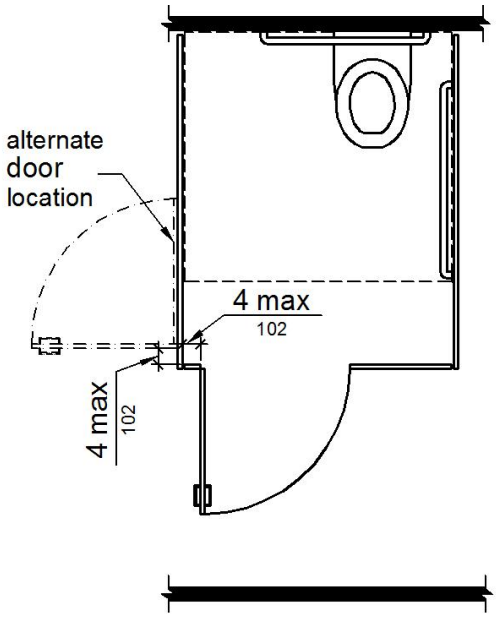

Figure *11B*-604.8.1.2
Wheelchair Accessible Toilet Compartment Doors

***11B*-604.8.1.3 Approach.** Compartments shall be arranged for left-hand or right-hand approach to the water closet.

***11B*-604.8.1.4 Toe clearance.** *At* least one side partition shall provide a toe clearance of 9 inches (*229* mm) minimum above the finish floor and 6 inches (*152* mm) deep minimum beyond the compartment-side face of the partition, exclusive of partition support members. *Partition components at toe clearances shall be smooth without sharp edges or abrasive surfaces.* Compartments for children's use shall provide a toe clearance of 12 inches (305 mm) minimum above the finish floor.

Exception: Toe clearance at the side partition is not required in a compartment greater than 66 inches (*1676* mm) wide.

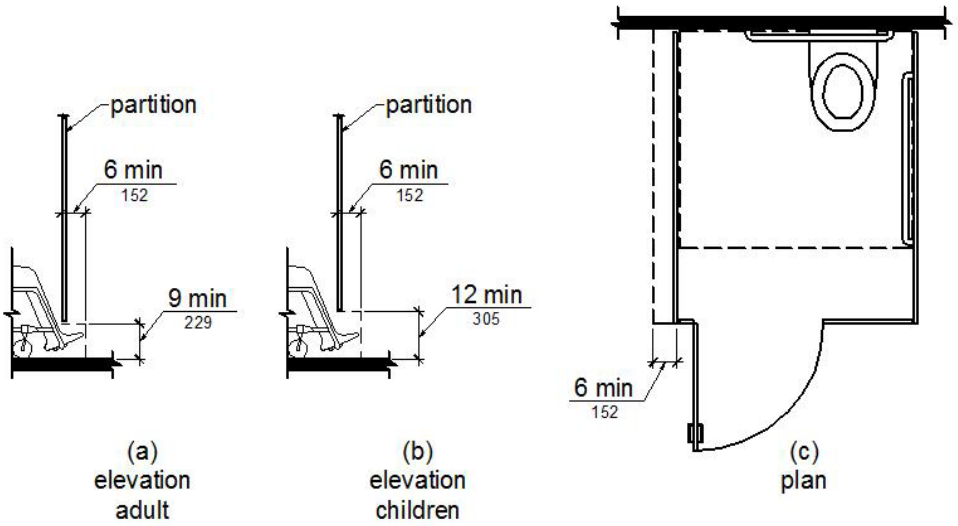

Figure *11B*-604.8.1.4
Wheelchair Accessible Toilet Compartment Toe Clearance

***11B*-604.8.1.5 Grab bars.** Grab bars shall comply with *Section 11B*-609. A side-wall grab bar complying with *Section 11B*-604.5.1 shall be provided and shall be located on the wall closest to the water closet. In addition, a rear-wall grab bar complying with *Section 11B*-604.5.2 shall be provided. *Where separate grab bars are required on adjacent walls at a common mounting height, an L-shaped grab bar meeting the dimensional requirements of Sections 11B-604.5.1 and 11B-604.5.2 shall be permitted.*

***11B*-604.8.2 Ambulatory accessible compartments.** Ambulatory accessible compartments shall comply with *Section 11B*-604.8.2.

***11B*-604.8.2.1 Size.** Ambulatory accessible compartments shall have a depth of 60 inches (*1524* mm) minimum and a width of 35 inches (*889* mm) minimum and 37 inches (940 mm) maximum.

***11B*-604.8.2.2 Doors.** Toilet compartment doors, including door hardware, shall comply with *Section 11B*-404, except that if the approach is to the latch side of the compartment door, clearance between the door side of the compartment and any obstruction shall be *44 inches (1118 mm)* minimum. The door shall be self-closing. A door pull complying with *Section 11B*-404.2.7 shall be placed on both sides of the door near the latch. Toilet compartment doors shall not swing into the minimum required compartment area.

***11B*-604.8.2.3 Grab bars.** Grab bars shall comply with *Section 11B*-609. A side-wall grab bar complying with *Section 11B*-604.5.1 shall be provided on both sides of the compartment.

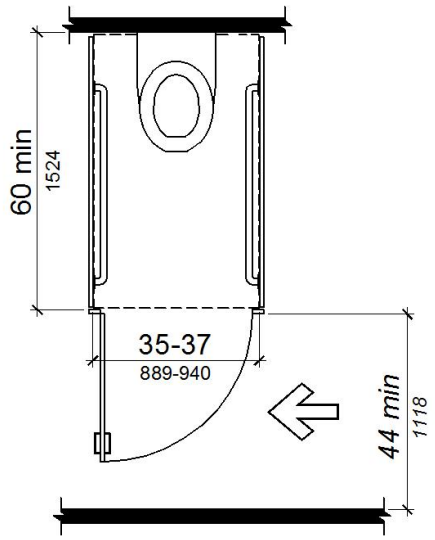

Figure *11B*-604.8.2
Ambulatory Accessible Toilet Compartment

***11B*-604.8.3 Coat hooks and shelves.** Coat hooks shall be located within one of the reach ranges specified in *Section 11B*-308. Shelves shall be located 40 inches (*1016* mm) minimum and 48 inches (*1219* mm) maximum above the finish floor.

***11B*-604.9 Water closets and toilet compartments for children's use.** Water closets and toilet compartments for children's use shall comply with *Section 11B*-604.9.

USDOJ

Advisory 11B-604.9 Water closets and toilet compartments for children's use. The requirements in Section 11B-604.9 are to be followed where the exception for children's water closets in Section 11B-604.1 is used. Table 11B-604.9 provides additional guidance in applying the specifications for water closets for children according to the age group served and reflects the differences in the size, stature, and reach ranges of children ages 3 through 12. The specifications chosen should correspond to the age of the primary user group. The specifications of one age group should be applied consistently in the installation of a water closet and related elements. ■

Table 11B-604.9 Suggested Dimensions for Children's Use

***Suggested Dimensions* for Water Closets Serving Children Ages 3 through 12**			
	Ages 3 and 4	**Ages 5 through 8**	**Ages 9 through 12**
Water Closet Centerline	12 inches (305 mm)	12 to 15 inches (305 to *381* mm)	15 to 18 inches (*381* to *457* mm)
Toilet Seat Height	11 to 12 inches (*279* to 305 mm)	12 to 15 inches (305 to *381* mm)	15 to 17 inches (*381* to *432* mm)
Grab Bar Height	18 to 20 inches (*457* to *508* mm)	20 to 25 inches (*508* to 635 mm)	25 to 27 inches (635 to *686* mm)
Dispenser Height	14 inches (*356* mm)	14 to 17 inches (*356* to *432* mm)	17 to 19 inches (*432* to *483* mm)

***11B*-604.9.1 Location.** The water closet shall be located with a wall or partition to the rear and to one side. The centerline of the water closet shall be 12 inches (305 mm) minimum and 18 inches (*457* mm) maximum from the side wall or partition, except that the water closet shall be 17 inches (*432*

mm) minimum and 19 inches (*483* mm) maximum from the side wall or partition in the ambulatory accessible toilet compartment specified in *Section 11B*-604.8.2. Compartments shall be arranged for left-hand or right-hand approach to the water closet.

***11B*-604.9.2 Clearance.** Clearance around a water closet shall comply with *Section 11B*-604.3.

***11B*-604.9.3 Height.** The height of water closets shall be 11 inches (*279* mm) minimum and 17 inches (*432* mm) maximum measured to the top of the seat. Seats shall not be sprung to return to a lifted position.

***11B*-604.9.4 Grab bars.** Grab bars for water closets shall comply with *Section 11B*-604.5.

***11B*-604.9.5 Flush controls.** Flush controls shall be hand operated or automatic. Hand operated flush controls shall comply with *Sections 11B*-309.2 and *11B*-309.4 and shall be installed 36 inches (*914* mm) maximum above the finish floor. Flush controls shall be located on the open side of the water closet except in ambulatory accessible compartments complying with *Section 11B*-604.8.2.

***11B*-604.9.6 Dispensers.** Toilet paper dispensers shall comply with *Section 11B*-309.4 and shall be 7 inches (*178* mm) minimum and 9 inches (*229* mm) maximum in front of the water closet measured to the centerline of the dispenser. The outlet of the dispenser shall be 14 inches (*356* mm) minimum and 19 inches (*483* mm) maximum above the finish floor. There shall be a clearance of 1½ inches (38 mm) minimum below the grab bar. Dispensers shall not be of a type that controls delivery or that does not allow continuous paper flow.

***11B*-604.9.7 Toilet compartments.** Toilet compartments shall comply with *Section 11B*-604.8.

11B-605 Urinals

***11B*-605.1 General.** Urinals shall comply with *Section 11B*-605.

USDOJ

Advisory 11B-605.1 General. Stall-type urinals provide greater accessibility for a broader range of persons, including people of short stature. ■

***11B*-605.2 Height and depth.** Urinals shall be the stall-type or the wall-hung type with the rim 17 inches (*432* mm) maximum above the finish floor or ground. Urinals shall be 13½ inches (*343* mm) deep minimum measured from the outer face of the urinal rim to the back of the fixture.

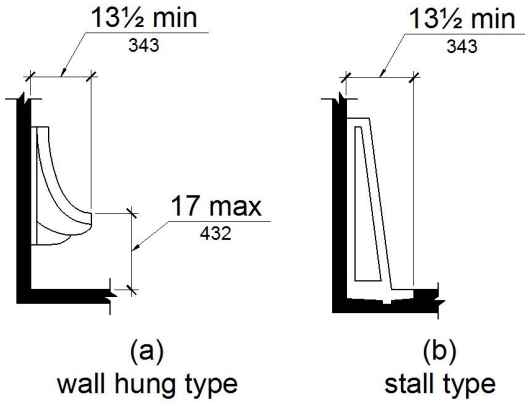

Figure *11B*-605.2
Height and Depth of Urinals

***11B*-605.3 Clear floor space.** A clear floor or ground space complying with *Section 11B*-305 positioned for forward approach shall be provided.

***11B*-605.4 Flush controls.** Flush controls shall be hand operated or automatic. Hand operated flush controls shall comply with *Section 11B*-309 *except that the flush control shall be mounted at a maximum height of 44 inches (1118 mm) above the finish floor*.

***11B*-606 Lavatories and sinks**

***11B*-606.1 General.** Lavatories and sinks shall comply with *Section 11B*-606.

> **USDOJ**
>
> **Advisory 11B-606.1 General.** If soap and towel dispensers are provided, they must be located within the reach ranges specified in Section 11B-308, *except for those in toilet and bathing rooms which must comply with Section 11B-603.5.* Locate soap and towel dispensers so that they are conveniently usable by a person at the accessible lavatory. ■

***11B*-606.2 Clear floor space.** A clear floor space complying with *Section 11B*-305, positioned for a forward approach, and knee and toe clearance complying with *Section 11B*-306 shall be provided.

Exceptions:

1. A parallel approach complying with *Section 11B*-305 shall be permitted to a kitchen sink in a space where a cook top or conventional range is not provided and to wet bars.

2. ***Reserved.***

3. In residential dwelling units, cabinetry shall be permitted under lavatories and kitchen sinks provided that all of the following conditions are met:

   (a) the cabinetry can be removed without removal or replacement of the fixture;

   (b) the finish floor extends under the cabinetry; and

   (c) the walls behind and surrounding the cabinetry are finished.

4. A knee clearance of 24 inches (610 mm) minimum above the finish floor or ground shall be permitted at lavatories and sinks used primarily by children 6 through 12 years where the rim or counter surface is 31 inches (*787* mm) maximum above the finish floor or ground.

5. A parallel approach complying with *Section 11B*-305 shall be permitted to lavatories and sinks used primarily by children 5 years and younger.

6. The dip of the overflow shall not be considered in determining knee and toe clearances.

7. No more than one bowl of a multi-bowl sink shall be required to provide knee and toe clearance complying with *Section 11B*-306.

***11B*-606.3 Height.** Lavatories and sinks shall be installed with the front of the higher of the rim or counter surface 34 inches (*864* mm) maximum above the finish floor or ground.

Exceptions:

1. ***Reserved.***

2. In residential dwelling unit kitchens, sinks that are adjustable to variable heights, 29 inches (*737* mm) minimum and 36 inches (*914* mm) maximum, shall be permitted where rough-in plumbing permits connections of supply and drain pipes for sinks mounted at the height of 29 inches (*737* mm).

***11B*-606.4 Faucets.** Controls for faucets shall comply with *Section 11B*-309. Hand-operated metering faucets shall remain open for 10 seconds minimum.

***11B*-606.5 Exposed pipes and surfaces.** Water supply and drain pipes under lavatories and sinks shall be insulated or otherwise configured to protect against contact. There shall be no sharp or abrasive surfaces under lavatories and sinks.

11B-606.6 Adjacent side wall or partition. *Lavatories, when located adjacent to a side wall or partition, shall be a minimum of 18 inches (457 mm) to the centerline of the fixture.*

11B-606.7 Sink depth. *Where a forward approach is required at a sink, knee and toe clearance shall be provided in compliance with Section 11B-306.*

***11B*-607 Bathtubs**

***11B*-607.1 General.** Bathtubs shall comply with *Section 11B*-607.

***11B*-607.2 Clearance.** Clearance in front of bathtubs shall extend the length of the bathtub and shall be *48 inches (1219 mm) wide minimum for forward approach and* 30 inches (*762* mm) wide minimum *for parallel approach*. A lavatory complying with *Section 11B*-606 shall be permitted at the control end of the clearance. Where a permanent seat is provided at the head end of the bathtub, the clearance shall extend 12 inches (305 mm) minimum beyond the wall at the head end of the bathtub.

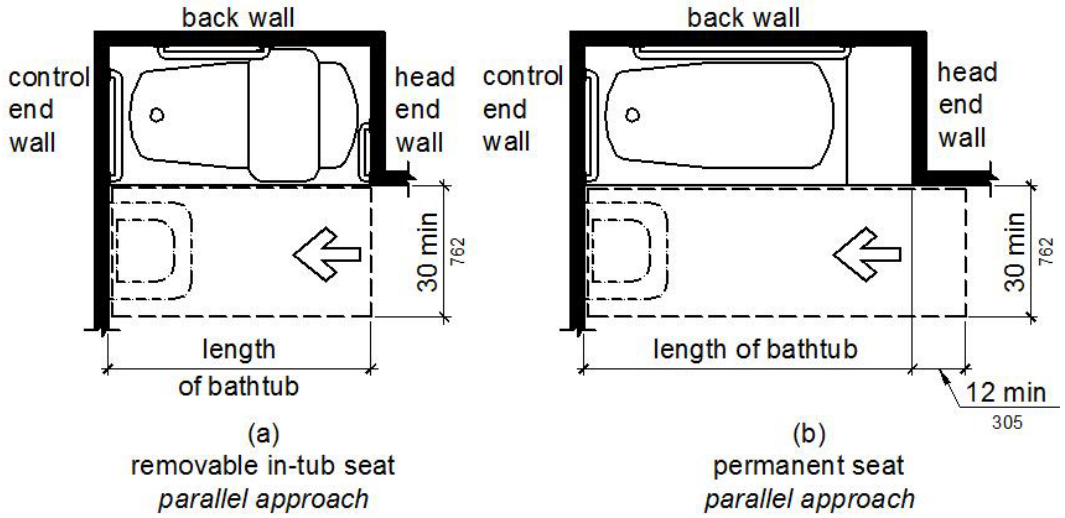

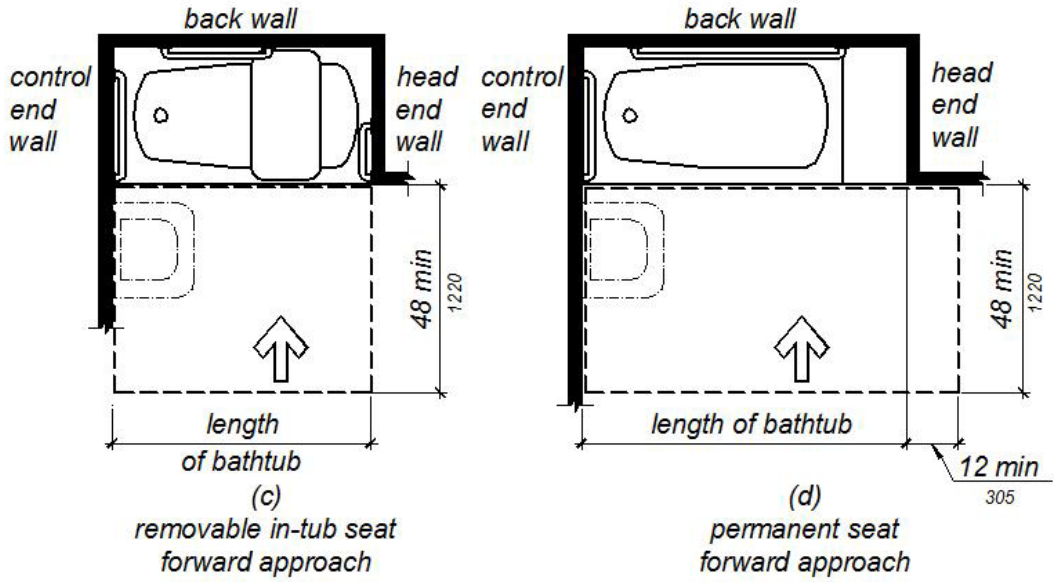

Figure *11B*-607.2
Clearance for Bathtubs

***11B*-607.3 Seat.** A permanent seat at the head end of the bathtub or a removable in-tub seat shall be provided. Seats shall comply with *Section 11B*-610.

***11B*-607.4 Grab bars.** Grab bars for bathtubs shall comply with *Section 11B*-609 and shall be provided in accordance with *Section 11B*-607.4.1 or *11B*-607.4.2. *Where separate grab bars are required on adjacent walls at a common mounting height, an L-shaped or U-shaped grab bar meeting the dimensional requirements of Section 11B-607.4.1 or 11B-607.4.2 shall be permitted.*

Exceptions:

1. ***Reserved.***

2. In residential dwelling units, grab bars shall not be required to be installed in bathtubs located in bathing facilities provided that reinforcement has been installed in walls and located so as to permit the installation of grab bars complying with *Section 11B*-607.4.

***11B*-607.4.1 Bathtubs with permanent seats.** For bathtubs with permanent seats, grab bars shall be provided in accordance with *Section 11B*-607.4.1.

***11B*-607.4.1.1 Back wall.** Two grab bars shall be installed on the back wall, one located in accordance with *Section 11B*-609.4 and the other located 8 inches (*203* mm) minimum and 10 inches (*254* mm) maximum above the rim of the bathtub. Each grab bar shall be installed 15 inches (*381* mm) maximum from the head end wall and 12 inches (305 mm) maximum from the control end wall.

***11B*-607.4.1.2 Control end wall.** A grab bar 24 inches (610 mm) long minimum shall be installed on the control end wall at the front edge of the bathtub.

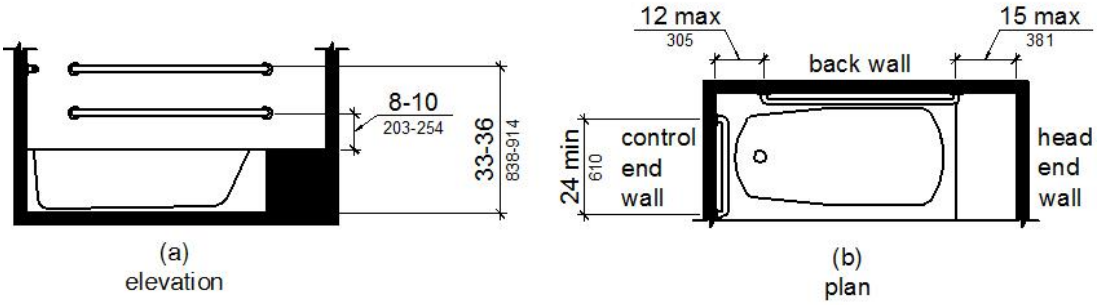

Figure *11B*-607.4.1
Grab Bars for Bathtubs with Permanent Seats

***11B*-607.4.2 Bathtubs without permanent seats.** For bathtubs without permanent seats, grab bars shall comply with *Section 11B*-607.4.2.

***11B*-607.4.2.1 Back wall.** Two grab bars shall be installed on the back wall, one located in accordance with *Section 11B*-609.4 and the other located 8 inches (*203* mm) minimum and 10 inches (*254* mm) maximum above the rim of the bathtub. Each grab bar shall be 24 inches (610 mm) long minimum and shall be installed 24 inches (610 mm) maximum from the head end wall and 12 inches (305 mm) maximum from the control end wall.

***11B*-607.4.2.2 Control end wall.** A grab bar 24 inches (610 mm) long minimum shall be installed on the control end wall at the front edge of the bathtub.

***11B*-607.4.2.3 Head end wall.** A grab bar 12 inches (305 mm) long minimum shall be installed on the head end wall at the front edge of the bathtub.

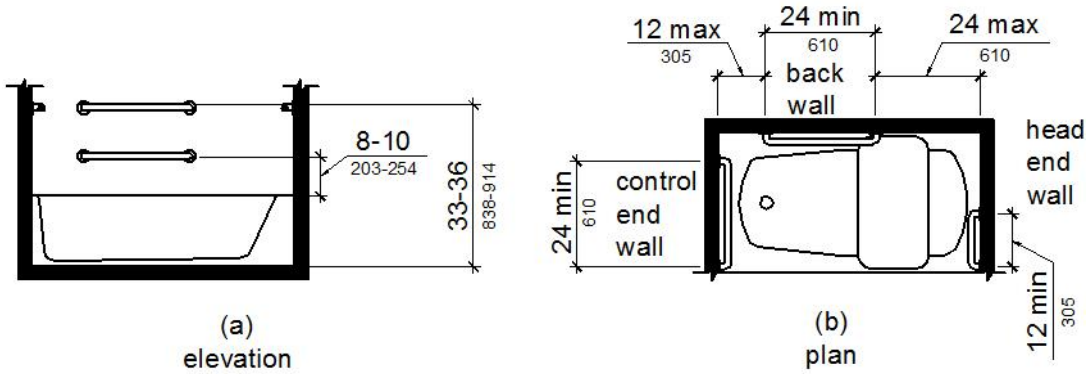

Figure *11B*-607.4.2
Grab Bars for Bathtubs with Removable In-Tub Seats

***11B*-607.5 Controls.** Controls, other than drain stoppers, shall be located on an end wall. Controls shall be between the bathtub rim and grab bar, and between the open side of the bathtub and the centerline of the width of the bathtub. Controls shall comply with *Section 11B*-309.4.

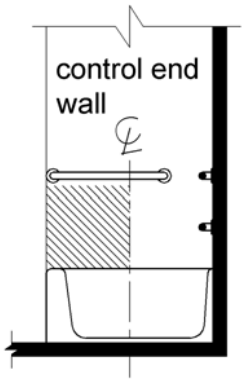

Figure *11B*-607.5
Bathtub Control Location

***11B*-607.6 Shower spray unit and water.** A shower spray unit with a hose 59 inches (*1499* mm) long minimum that can be used both as a fixed-position shower head and as a hand-held shower shall be provided. The shower spray unit shall have an on/off control with a non-positive shut-off. If an adjustable-height shower head on a vertical bar is used, the bar shall be installed so as not to obstruct the use of grab bars. Bathtub shower spray units shall deliver water that is 120°F (49°C) maximum.

> USDOJ
>
> **Advisory 11B-607.6 Shower spray unit and water.** Ensure that hand-held shower spray units are capable of delivering water pressure substantially equivalent to fixed shower heads. ■

***11B*-607.7 Bathtub enclosures.** Enclosures for bathtubs shall not obstruct controls, faucets, shower and spray units or obstruct transfer from wheelchairs onto bathtub seats or into bathtubs. Enclosures on bathtubs shall not have tracks installed on the rim of the open face of the bathtub.

11B-608 Shower compartments

***11B*-608.1 General.** Shower compartments shall comply with *Section 11B*-608.

> USDOJ
>
> **Advisory 11B-608.1 General.** Shower stalls that are 60 inches (1525 mm) wide and have no curb may increase the usability of a bathroom because the shower area provides additional maneuvering space. ■

***11B*-608.2 Size and clearances for shower compartments.** Shower compartments shall have sizes and clearances complying with *Section 11B*-608.2.

11B*-608.2.1 *Reserved.

***11B*-608.2.2 Standard roll-in type shower compartments.** Standard roll-in type shower compartments shall be 30 inches (*762* mm) wide minimum by 60 inches (*1524* mm) deep minimum clear inside dimensions measured at center points of opposing sides *with a full opening width on the long side*.

***11B*-608.2.2.1 Clearance.** A *36 inch (914 mm)* wide minimum by 60 inch (*1524* mm) long minimum clearance shall be provided adjacent to the open face of the shower compartment.

Exception: ***Reserved.***

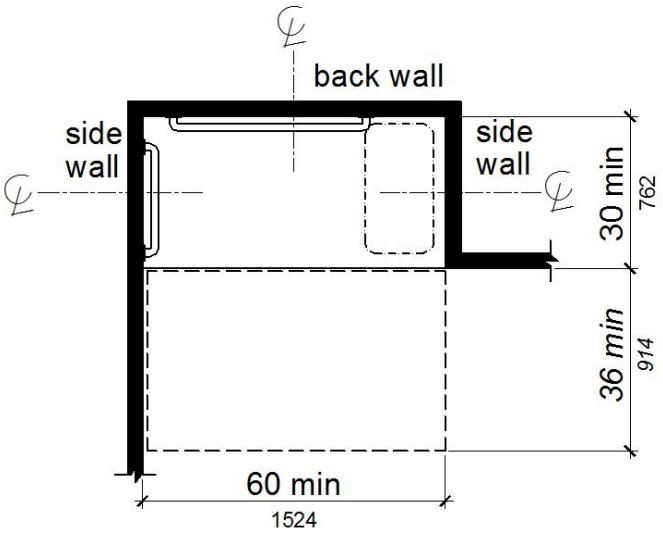

Note: inside finished dimensions measured at the center points of opposing sides

Figure *11B*-608.2.2
Standard Roll-In Type Shower Compartment Size and Clearance

***11B*-608.2.3 Alternate roll-in type shower compartments.** Alternate roll-in type shower compartments shall be 36 inches (*914* mm) wide and 60 inches (*1524* mm) deep minimum clear inside dimensions measured at center points of opposing sides. A 36 inch (*914* mm) wide minimum entry shall be provided at one end of the long side of the compartment.

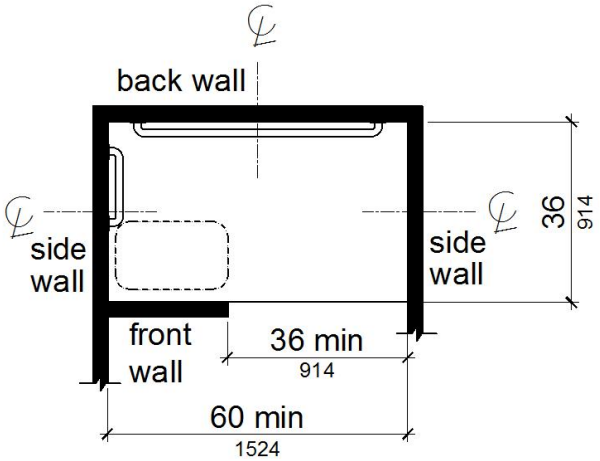

Note: inside finished dimensions measured at the center points of opposing sides

Figure *11B*-608.2.3
Alternate Roll-In Type Shower Compartment Size and Clearance

***11B*-608.3 Grab bars.** Grab bars shall comply with *Section 11B*-609 and shall be provided in accordance with *Section 11B*-608.3. Where multiple grab bars are used, required horizontal grab bars shall be installed at the same height above the finish floor. *Where separate grab bars are required on adjacent walls at a common mounting height, an L-shaped or U-shaped grab bar meeting the dimensional requirements of Section 11B-608.3.2 or 11B-608.3.3 shall be permitted.*

Exceptions:

1. ***Reserved.***

2. In residential dwelling units, grab bars shall not be required to be installed in showers located in bathing facilities provided that reinforcement has been installed in walls and located so as to permit the installation of grab bars complying with *Section 11B*-608.3.

11B*-608.3.1 *Reserved.

***11B*-608.3.2 Standard roll-in type shower compartments.** *Grab* bars shall be provided on the back wall and the side wall opposite the seat. Grab bars shall not be provided above the seat. Grab bars shall be installed 6 inches (*152* mm) maximum from adjacent walls.

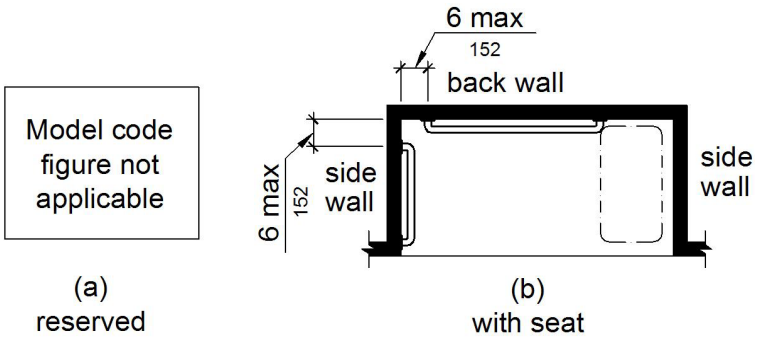

Figure *11B*-608.3.2
Grab Bars for Standard Roll-In Type *Shower*

***11B*-608.3.3 Alternate roll-in type shower compartments.** In alternate roll-in type shower compartments, grab bars shall be provided on the back wall and the side wall farthest from the compartment entry. Grab bars shall not be provided above the seat. Grab bars shall be installed 6 inches (*152* mm) maximum from adjacent walls.

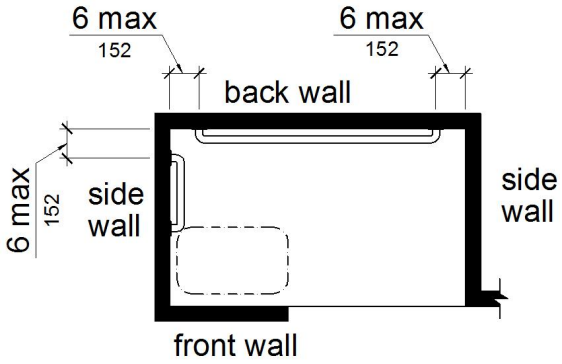

Figure *11B*-608.3.3
Grab Bars for Alternate Roll-In Type Showers

***11B*-608.4 Seats.** A folding seat shall be provided in roll-in type showers. Seats shall comply with *Section 11B*-610.

Exception: In residential dwelling units, seats shall not be required in shower compartments provided that reinforcement has been installed in walls so as to permit the installation of seats complying with *Section 11B*-608.4.

***11B*-608.5 Controls.** Controls, faucets, and shower spray units shall comply with *Section 11B*-309.4. *Controls and faucets shall be of a single-lever design.*

11B*-608.5.1 *Reserved.

***11B*-608.5.2 Standard roll-in type shower compartments.** *In standard roll-in type shower compartments, operable parts of controls and faucets shall be installed on the back wall of the compartment adjacent to the seat wall 19 inches (483 mm) minimum and 27 inches (686 mm) maximum from the seat wall; and shall be located above the grab bar, but no higher than 48 inches (1219 mm) above the shower floor, with their centerline at 39 inches (991 mm) to 41 inches (1041 mm) above the shower floor.*

Operable parts of the shower spray unit, including the handle, shall be installed on the back wall adjacent to the seat wall 19 inches (483 mm) minimum and 27 inches (686 mm) maximum from the seat wall; and shall be located above the grab bar, but no higher than 48 inches (1219 mm) above the shower floor.

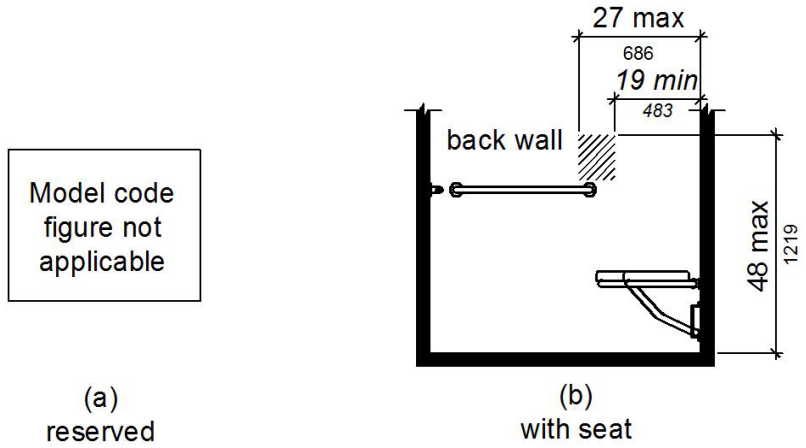

Figure *11B*-608.5.2
Standard Roll-In Type Shower Compartment Control Location

***11B*-608.5.3 Alternate roll-in type shower compartments.** *In alternate roll-in type shower compartments, operable parts of controls and faucets shall be installed on the side wall of the compartment adjacent to the seat wall 19 inches (483 mm) minimum and 27 inches (686 mm) maximum from the seat wall; and shall be located above the grab bar, but no higher than 48 inches (1219 mm) above the shower floor, with their centerline at 39 inches (991 mm) to 41 inches (1041 mm) above the shower floor.*

Operable parts of the shower spray unit, including the handle, shall be installed on the side wall of the compartment adjacent to the seat wall 17 inches (432 mm) minimum and 19 inches (483 mm) maximum from the seat wall or on the back wall opposite the seat 15 inches (381 mm) maximum, left or right, of the centerline of the seat; and shall be located above the grab bar, but no higher than 48 inches (1219 mm) above the shower floor.

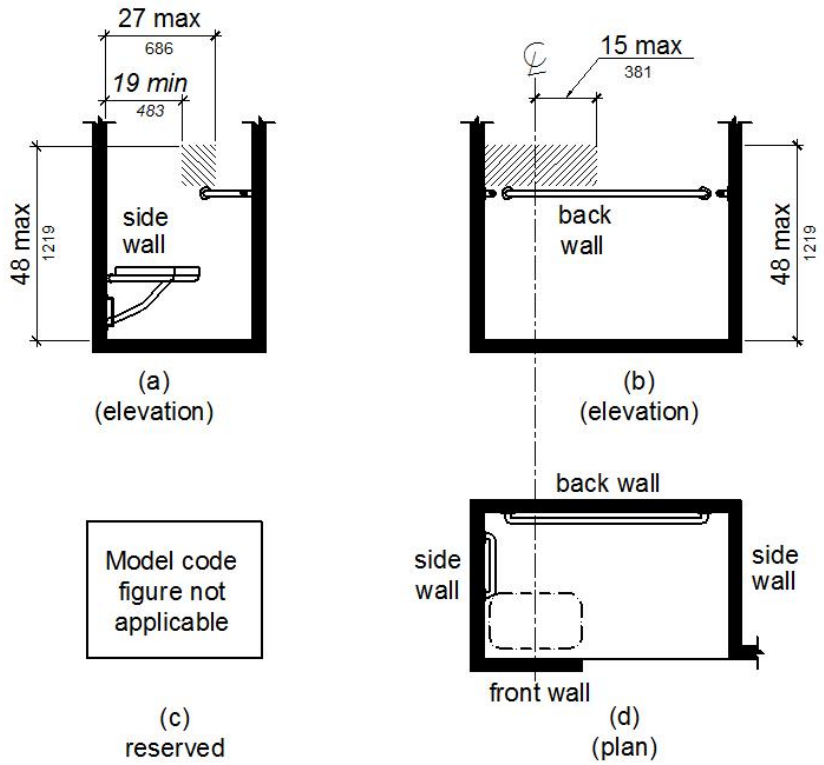

Figure *11B*-608.5.3
Alternate Roll-In Type Shower Compartment Control Location

***11B*-608.6 Shower spray unit and water.** A shower spray unit with a hose 59 inches (*1499* mm) long minimum that can be used both as a fixed-position shower head and as a hand-held shower shall be provided. The shower spray unit shall have an on/off control with a non-positive shut-off. If an adjustable-height shower head on a vertical bar is used, the bar shall be installed so as not to obstruct the use of grab bars. Shower spray units shall deliver water that is 120°F (49°C) maximum.

Exception: *Where subject to excessive vandalism, two fixed shower heads shall be installed instead of a hand-held spray unit in facilities that are not transient lodging guest rooms. Each shower head shall be installed so it can be operated independently of the other and shall have swivel angle adjustments, both vertically and horizontally.*

USDOJ

Advisory 11B-608.6 Shower spray unit and water. Ensure that hand-held shower spray units are capable of delivering water pressure substantially equivalent to fixed shower heads. ■

***11B*-608.7 Thresholds.** Thresholds in roll-in type shower compartments shall be ½ inch (*12.7* mm) high maximum in accordance with *Section 11B*-303.

Exception: ***Reserved.***

***11B*-608.8 Shower enclosures.** Enclosures for shower compartments shall not obstruct controls, faucets, and shower spray units or obstruct transfer from wheelchairs onto shower seats.

11B-608.9 Shower floor or ground surface. *Floor or ground surfaces of showers shall comply with Section 11B-302.1 and shall be sloped 1:48 maximum in any direction. Where drains are provided, grate openings shall be ¼ inch (6.4 mm) maximum and flush with the floor surface.*

11B-608.10 Soap dish. *Where a soap dish is provided, it shall be located on the control wall at 40 inches (1016 mm) maximum above the shower floor, and within the reach limits from the seat.*

***11B*-609 Grab bars**

***11B*-609.1 General.** Grab bars in toilet facilities and bathing facilities shall comply with *Section 11B*-609.

***11B*-609.2 Cross section.** Grab bars shall have a cross section complying with *Section 11B*-609.2.1 or *11B*-609.2.2.

***11B*-609.2.1 Circular cross section.** Grab bars with circular cross sections shall have an outside diameter of 1¼ inches (32 mm) minimum and 2 inches (51 mm) maximum.

***11B*-609.2.2 Non-circular cross section.** Grab bars with non-circular cross sections shall have a cross-section dimension of 2 inches (51 mm) maximum and a perimeter dimension of 4 inches (*102* mm) minimum and 4.8 inches (*122* mm) maximum.

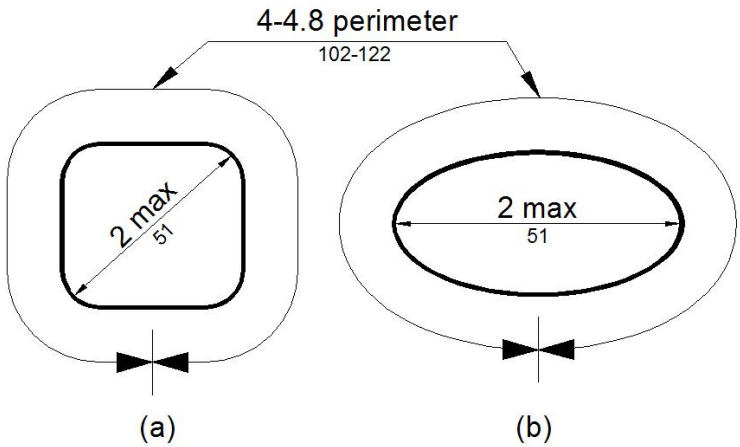

Figure *11B*-609.2.2
Grab Bar Non-Circular Cross Section

***11B*-609.3 Spacing.** The space between the wall and the grab bar shall be 1½ inches (38 mm). The space between the grab bar and projecting objects below and at the ends shall be 1½ inches (38 mm) minimum. The space between the grab bar and projecting objects above shall be 12 inches (305 mm) minimum.

Exceptions:

1. The space between the grab bars and shower controls, shower fittings, and other grab bars above shall be permitted to be 1½ inches (38 mm) minimum.

2. *For L-shaped or U-shaped grab bars complying with Section 11B-609.9 the space between the walls and the grab bar shall be 1½ inches (38 mm) minimum for a distance of 6 inches on either side of the inside corner between two adjacent wall surfaces.*

DSA

Advisory 11B-609.3 Spacing. The distance between the grab bar and wall is an exact dimension. Many disabled people rely heavily upon grab bars to maintain balance and

prevent serious falls. Many people brace their forearms between supports and walls to give them more leverage and stability in maintaining balance or for lifting. The grab bar clearance of 1½ inches required in this section is a safety clearance to prevent injuries resulting from arms slipping through the openings. It also provides adequate gripping room. ■

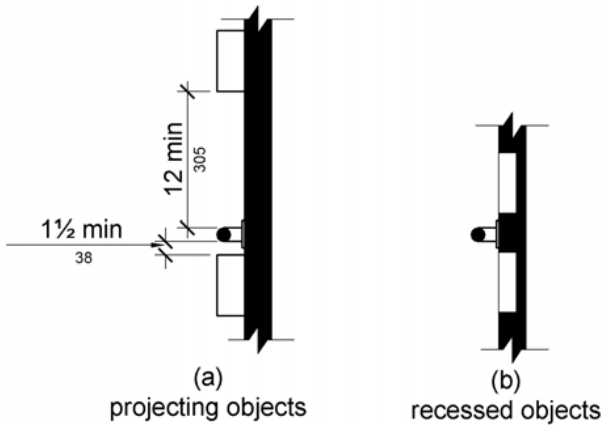

Figure *11B*-609.3
Spacing of Grab Bars

***11B*-609.4 Position of grab bars.** Grab bars shall be installed in a horizontal position, 33 inches (*838* mm) minimum and 36 inches (*914* mm) maximum above the finish floor measured to the top of the gripping surface, except that at water closets for children's use complying with *Section 11B*-604.9, grab bars shall be installed in a horizontal position 18 inches (*457* mm) minimum and 27 inches (*686* mm) maximum above the finish floor measured to the top of the gripping surface. The height of the lower grab bar on the back wall of a bathtub shall comply with *Section 11B*-607.4.1.1 or *11B*-607.4.2.1.

***11B*-609.5 Surface hazards.** Grab bars and any wall or other surfaces adjacent to grab bars shall be free of sharp or abrasive elements and shall have rounded edges.

***11B*-609.6 Fittings.** Grab bars shall not rotate within their fittings.

***11B*-609.7 Installation.** Grab bars shall be installed in any manner that provides a gripping surface at the specified locations and that does not obstruct the required clear floor space.

***11B*-609.8 Structural strength.** Allowable stresses shall not be exceeded for materials used when a vertical or horizontal force of 250 pounds (1112 N) is applied at any point on the grab bar, fastener, mounting device, or supporting structure.

11B-609.9 Alternate configuration. *L-shaped or U-shaped grab bars shall be permitted.*

***11B*-610 Seats**

***11B*-610.1 General.** Seats in bathtubs and shower compartments shall comply with *Section 11B*-610.

***11B*-610.2 Bathtub seats.** The top of bathtub seats shall be 17 inches (*432* mm) minimum and 19 inches (*483* mm) maximum above the bathroom finish floor. The depth of a removable in-tub seat shall be 15 inches (*381* mm) minimum and 16 inches (*406* mm) maximum. The seat shall be capable of secure placement. Permanent seats at the head end of the bathtub shall be 15 inches (*381* mm) deep minimum and shall extend from the back wall to or beyond the outer edge of the bathtub.

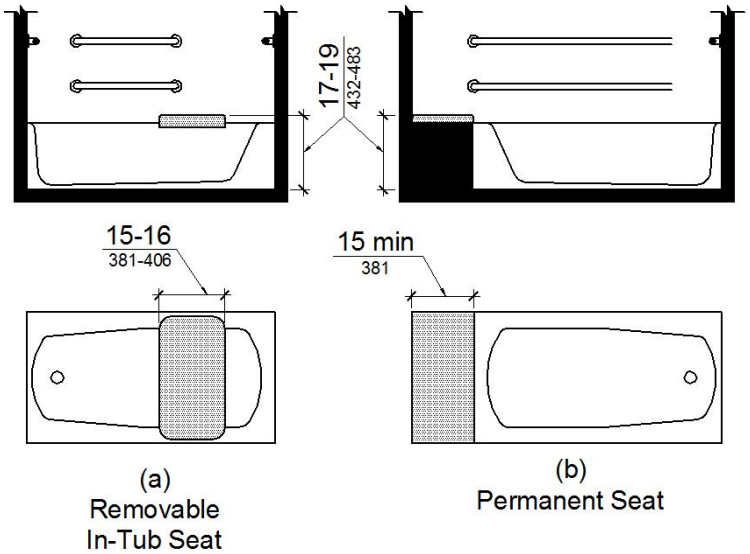

Figure *11B*-610.2
Bathtub Seats

***11B*-610.3 Shower compartment seats.** *A seat* in a standard roll-in shower compartment shall be a folding type, shall be installed on the side wall adjacent to the controls, and shall extend from the back wall to a point within 3 inches (*76* mm) of the compartment entry. *A seat* in an alternate roll-in type shower compartment shall be a folding type, shall be installed on the front wall opposite the back wall, and shall extend from the adjacent side wall to a point within 3 inches (*76* mm) of the compartment entry. The top of the seat shall be 17 inches (*432* mm) minimum and 19 inches (*483* mm) maximum above the bathroom finish floor. *When folded, the seat shall extend 6 inches (152 mm) maximum from the mounting wall.* Seats shall comply with *Section 11B*-610.3.1 or *11B*-610.3.2.

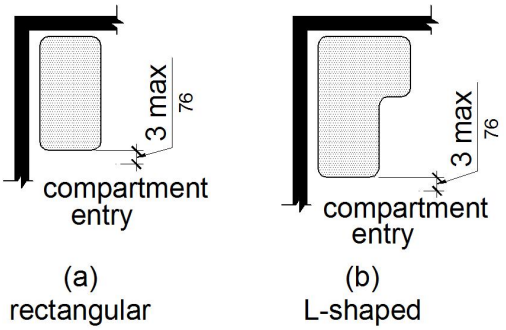

Figure *11B*-610.3
Extent of Seat

***11B*-610.3.1 Rectangular seats.** The rear edge of a rectangular seat shall be 2½ inches (64 mm) maximum and the front edge 15 inches (*381* mm) minimum and 16 inches (*406* mm) maximum from the seat wall. The side edge of the seat shall be 1½ inches (38 mm) maximum from the adjacent wall.

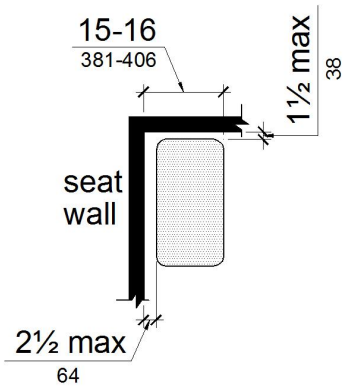

Figure *11B*-610.3.1
Rectangular Shower Seat

***11B*-610.3.2 L-shaped seats.** The rear edge of an L-shaped seat shall be 2½ inches (64 mm) maximum and the front edge 15 inches (*381* mm) minimum and 16 inches (*406* mm) maximum from the seat wall. The rear edge of the "L" portion of the seat shall be 1½ inches (38 mm) maximum from the wall and the front edge shall be 14 inches (*356* mm) minimum and 15 inches (*381* mm) maximum from the wall. The end of the "L" shall be 22 inches (*559* mm) minimum and 23 inches (*584* mm) maximum from the main seat wall.

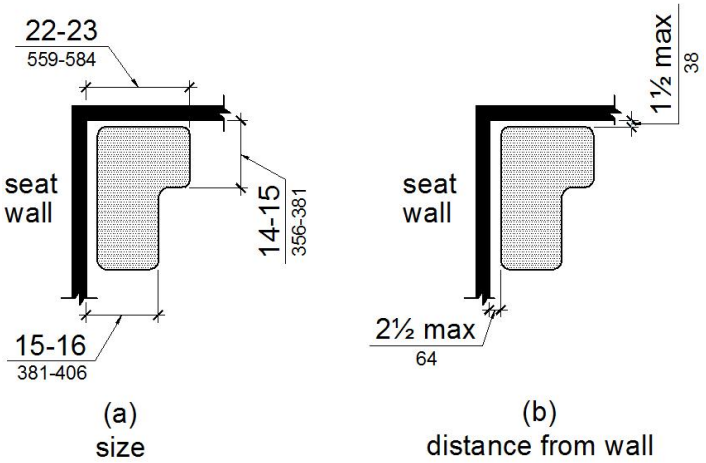

Figure *11B*-610.3.2
L-Shaped Shower Seat

***11B*-610.4 Structural strength.** Allowable stresses shall not be exceeded for materials used when a vertical or horizontal force of 250 pounds (1112 N) is applied at any point on the seat, fastener, mounting device, or supporting structure.

***11B*-611 Washing machines and clothes dryers**

***11B*-611.1 General.** Washing machines and clothes dryers shall comply with *Section 11B*-611.

***11B*-611.2 Clear floor space.** A clear floor or ground space complying with *Section 11B*-305 positioned for parallel approach shall be provided. The clear floor or ground space shall be centered on the appliance.

***11B*-611.3 Operable parts.** Operable parts, including doors, lint screens, and detergent and bleach compartments shall comply with *Section 11B*-309.

***11B*-611.4 Height.** Top loading machines shall have the door to the laundry compartment located 36 inches (*914* mm) maximum above the finish floor. Front loading machines shall have the bottom of the opening to the laundry compartment located 15 inches (*381* mm) minimum and 36 inches (*914* mm) maximum above the finish floor.

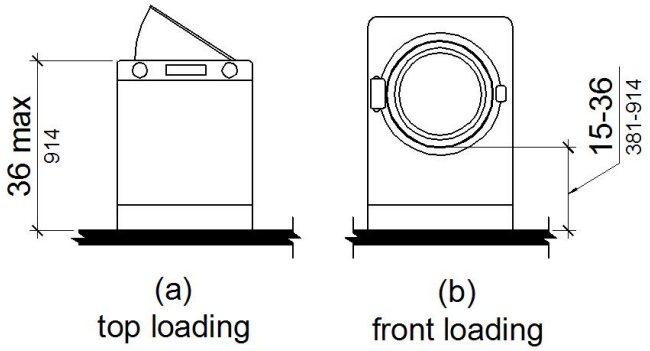

Figure *11B*-611.4
Height of Laundry Compartment Opening

***11B*-612 Saunas and steam rooms**

***11B*-612.1 General.** Saunas and steam rooms shall comply with *Section 11B*-612.

***11B*-612.2 Bench.** Where seating is provided in saunas and steam rooms, at least one bench shall comply with *Section 11B*-903. Doors shall not swing into the clear floor space required by *Section 11B*-903.2.

> **Exception:** A readily removable bench shall be permitted to obstruct the turning space required by *Section 11B*-612.3 and the clear floor or ground space required by *Section 11B*-903.2.

***11B*-612.3 Turning space.** A turning space complying with *Section 11B*-304 shall be provided within saunas and steam rooms.

***11B*-701 General**

***11B*-701.1 Scope.** The provisions of *Division* 7 shall apply where required by *Division* 2 or where referenced by a requirement in this *chapter*.

***11B*-702 Fire alarm systems**

***11B*-702.1 General.** Fire alarm systems shall have permanently installed audible and visible alarms complying with NFPA 72 *and Chapter 9, Sections 907.5.2.1 and 907.5.2.3.*

Exception: ***Reserved.***

***11B*-703 Signs**

***11B*-703.1 General.** Signs shall comply with *Section 11B*-703. Where both visual and tactile characters are required, either one sign with both visual and tactile characters, or two separate signs, one with visual, and one with tactile characters, shall be provided.

11B-703.1.1 Plan review and inspection. *Signs as specified in Section 11B-703, or in other sections of this code, when included in the construction of new buildings or facilities, or when included, altered or replaced due to additions, alterations or renovations to existing buildings or facilities, and when a permit is required, shall comply with Sections 11B-703.1.1.1 and 11B-703.1.1.2.*

11B-703.1.1.1 Plan review*. Plans, specifications or other information indicating compliance with these regulations shall be submitted to the enforcing agency for review and approval.*

11B-703.1.1.2 Inspection. *Signs and identification devices shall be field inspected after installation and approved by the enforcing agency prior to the issuance of a final certificate of occupancy per Chapter 1, Division II, Section 111, or final approval where no certificate of occupancy is issued. The inspection shall include, but not be limited to, verification that Braille dots and cells are properly spaced and the size, proportion and type of raised characters are in compliance with these regulations.*

***11B*-703.2 Raised characters.** Raised characters shall comply with *Section 11B*-703.2 and shall be duplicated in Braille complying with *Section 11B*-703.3. Raised characters shall be installed in accordance with *Section 11B*-703.4.

USDOJ

Advisory 11B-703.2 Raised characters. Signs that are designed to be read by touch should not have sharp or abrasive edges. ■

***11B*-703.2.1 Depth.** Raised characters shall be 1/32 inch (0.8 mm) minimum above their background.

***11B*-703.2.2 Case.** Characters shall be uppercase.

***11B*-703.2.3 Style.** Characters shall be sans serif. Characters shall not be italic, oblique, script, highly decorative, or of other unusual forms.

***11B*-703.2.4 Character proportions**. Characters shall be selected from fonts where the width of the uppercase letter “O” is *60* percent minimum and 110 percent maximum of the height of the uppercase letter “I”.

***11B*-703.2.5 Character height.** Character height measured vertically from the baseline of the character shall be 5/8 inch (*15.9* mm) minimum and 2 inches (51 mm) maximum based on the height of the uppercase letter “I”.

Exception: ***Reserved.***

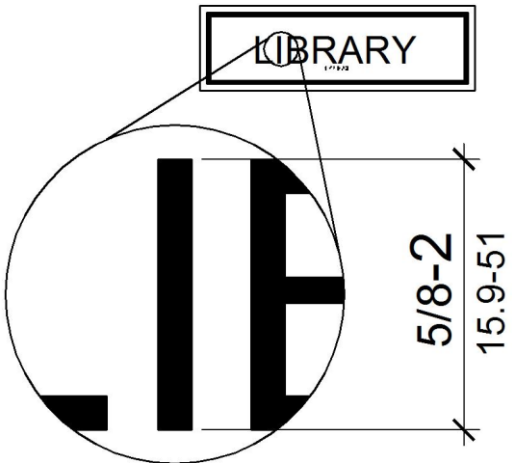

Figure *11B*-703.2.5
Height of Raised Characters

***11B*-703.2.6 Stroke thickness.** Stroke thickness of the uppercase letter “I” shall be 15 percent maximum of the height of the character.

***11B*-703.2.7 Character spacing.** Character spacing shall be measured between the two closest points of adjacent raised characters within a message, excluding word spaces. Where characters have rectangular cross sections, spacing between individual raised characters shall be 1/8 inch (3.2 mm) minimum and 4 times the raised character stroke width maximum. Where characters have other cross sections, spacing between individual raised characters shall be 1/16 inch (1.6 mm) minimum and 4 times the raised character stroke width maximum at the base of the cross sections, and 1/8 inch (3.2 mm) minimum and 4 times the raised character stroke width maximum at the top of the cross sections. Characters shall be separated from raised borders and decorative elements 3/8 inch (9.5 mm) minimum.

***11B*-703.2.8 Line spacing.** Spacing between the baselines of separate lines of raised characters within a message shall be 135 percent minimum and 170 percent maximum of the raised character height.

11B-703.2.9 Format. *Text shall be in a horizontal format.*

***11B*-703.3 Braille.** Braille shall be contracted (Grade 2) and shall comply with *Sections 11B*-703.3 and *11B*-703.4.

DSA

Advisory 11B-703.3 Braille. Contracted Braille uses special characters called contractions to make words shorter. Standard English uses contractions like "don't" as a short way of writing two words, such as "do" and "not." In Braille there are many additional contractions. Some contractions stand for a whole word and other contractions stand for a group of letters within a word. In addition to contractions, the Braille code includes short-form words which are abbreviated spellings of common longer words. For example, "tomorrow" is spelled "tm", "friend" is spelled "fr", and "little" is spelled "ll" in Braille. ■

***11B*-703.3.1 Dimensions and capitalization.** Braille dots shall have a domed or rounded shape and shall comply with Table *11B*-703.3.1. The indication of an uppercase letter or letters shall only be used before the first word of sentences, proper nouns and names, individual letters of the alphabet, initials, and acronyms.

Table *11B*-703.3.1 Braille Dimensions

Measurement Range	Minimum in Inches Maximum in Inches
Dot base diameter	0.059 (1.5 mm) to 0.063 (1.6 mm)
Distance between two dots in the same cell[1]	0.100 (2.5 mm)
Distance between corresponding dots in adjacent cells[1]	0.300 (7.6 mm)
Dot height	0.025 (0.6 mm) to 0.037 (0.9 mm)
Distance between corresponding dots from one cell directly below[1]	0.395 (10 mm) to 0.400 (10.2 mm)
1. Measured center to center.	

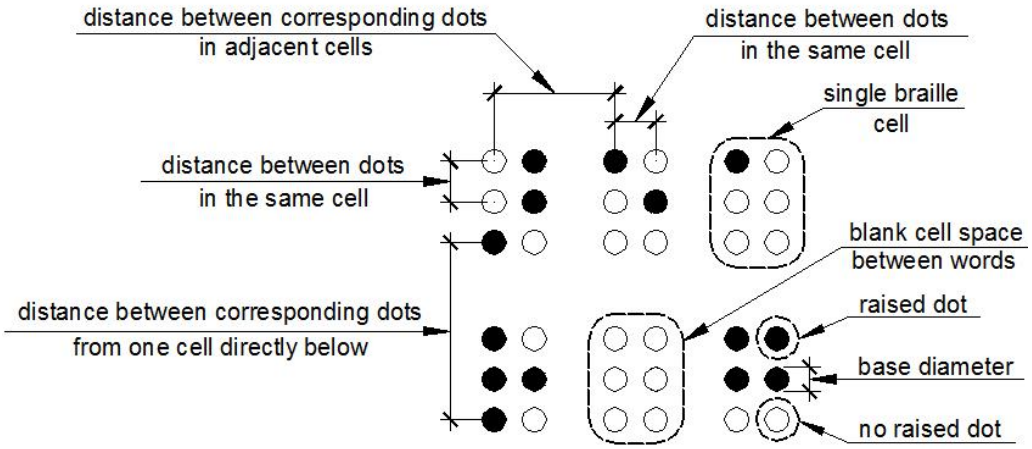

Figure *11B*-703.3.1
Braille Measurement

***11B*-703.3.2 Position.** Braille shall be positioned below the corresponding text *in a horizontal format, flush left or centered*. If text is multi-lined, Braille shall be placed below the entire text. Braille shall be separated 3/8 inch (9.5 mm) minimum *and $^1/_2$ inch (12.7 mm) maximum* from any other tactile characters and 3/8 inch (9.5 mm) minimum from raised borders and decorative elements.

Exception: Braille provided on elevator car controls shall be separated 3/16 inch (4.8 mm) minimum and shall be located directly below the corresponding raised characters or symbols.

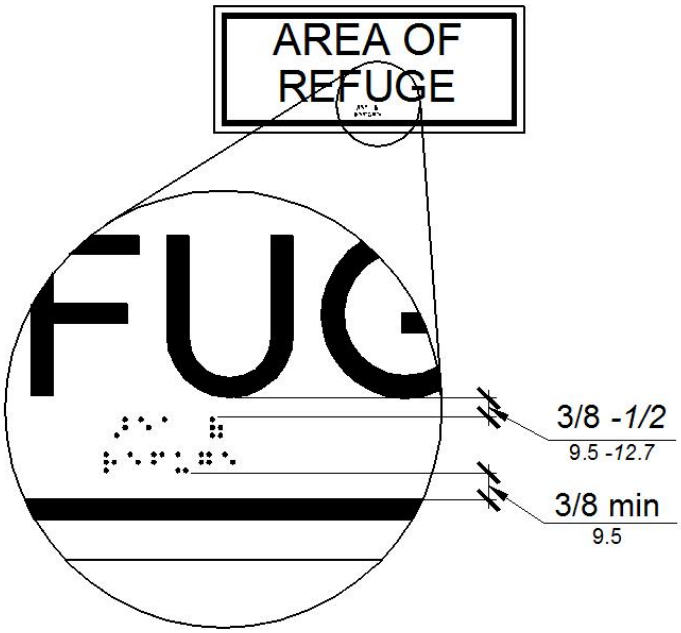

Figure *11B*-703.3.2
Position of Braille

***11B*-703.4 Installation height and location.** Signs with tactile characters shall comply with *Section 11B*-703.4.

***11B*-703.4.1 Height above finish floor or ground.** Tactile characters on signs shall be located 48 inches (*1219* mm) minimum above the finish floor or ground surface, measured from the baseline of the lowest *Braille cells* and 60 inches (*1524* mm) maximum above the finish floor or ground surface, measured from the baseline of the highest *line of raised characters*.

Exception: Tactile characters for elevator car controls shall not be required to comply with *Section 11B*-703.4.1.

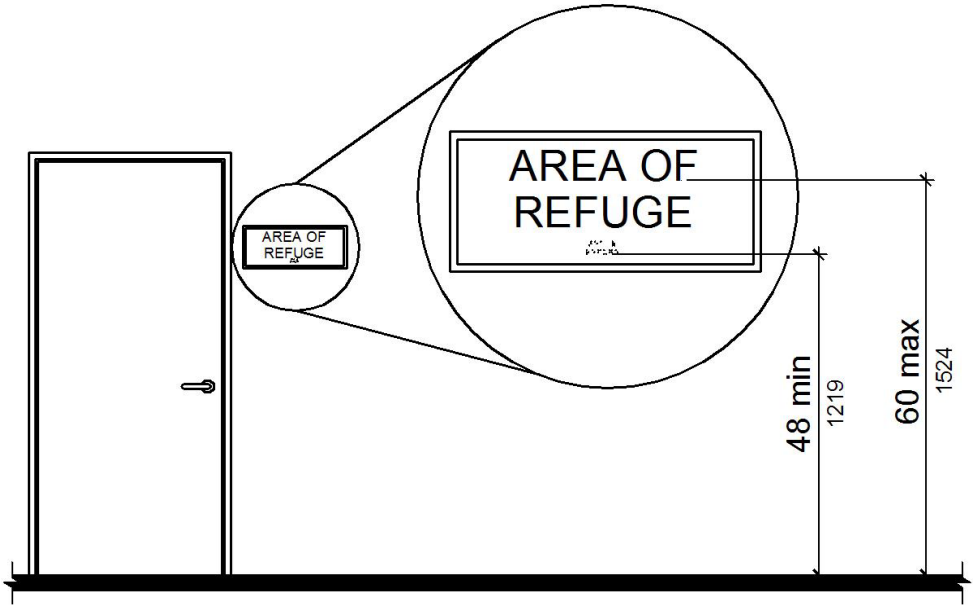

Figure *11B*-703.4.1
Height of Tactile Characters Above Finish Floor or Ground

***11B*-703.4.2 Location.** Where a tactile sign is provided at a door, the sign shall be located alongside the door at the latch side. Where a tactile sign is provided at double doors with one active leaf, the sign shall be located on the inactive leaf. Where a tactile sign is provided at double doors with two active leafs, the sign shall be located to the right of the right hand door. Where there is no wall space at the latch side of a single door or at the right side of double doors, signs shall be located on the nearest adjacent wall. Signs containing tactile characters shall be located so that a clear floor space of 18 inches (*457* mm) minimum by 18 inches (*457* mm) minimum, centered on the tactile characters, is provided beyond the arc of any door swing between the closed position and 45 degree open position. *Where provided, signs identifying permanent rooms and spaces shall be located at the entrance to, and outside of the room or space. Where provided, signs identifying exits shall be located at the exit door when approached in the direction of egress travel.*

Exception: *In alterations where sign installation locations identified in Section 11B-703.4.2 are obstructed or otherwise unavailable for sign installation, signs with tactile characters shall be permitted on the push side of doors with closers and without hold-open devices.*

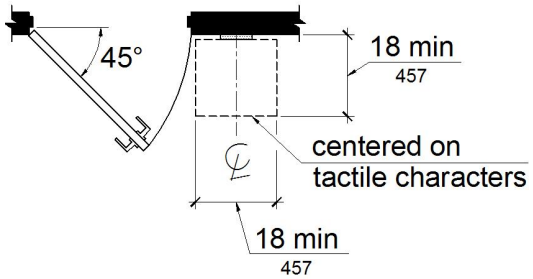

Figure *11B*-703.4.2
Location of Tactile Signs at Doors

DSA

Advisory 11B-703.4.2 Location. Persons with visual impairments are trained to look in a consistent location for tactile signs. When a tactile sign is provided at a door, the sign must be located alongside the door, preferably at the latch side. When tactile signs are mounted inconsistently on surrounding wall surfaces, or mounted on the door itself, they are difficult to find and may create a safety hazard. In this section, the term “wall space” refers to any type of partition assembly or adjacent surface of sufficient dimension where a sign can lay flat, including glass partitions or sidelites. ■

***11B*-703.5 Visual characters.** Visual characters shall comply with *Section 11B*-703.5.

Exception: Where visual characters comply with *Section 11B*-703.2 and are accompanied by Braille complying with *Section 11B*-703.3, they shall not be required to comply with *Sections 11B*-703.5.2 through *11B-703.5.6, 11B-703.5.8 and 11B*-703.5.9.

***11B*-703.5.1 Finish and contrast.** Characters and their background shall have a non-glare finish. Characters shall contrast with their background with either light characters on a dark background or dark characters on a light background.

USDOJ

Advisory 11B-703.5.1 Finish and contrast. Signs are more legible for persons with low vision when characters contrast as much as possible with their background. Additional factors affecting the ease with which the text can be distinguished from its background include shadows cast by lighting sources, surface glare, and the uniformity of the text and its background colors and textures. ■

***11B*-703.5.2 Case.** Characters shall be uppercase or lowercase or a combination of both.

***11B*-703.5.3 Style.** Characters shall be conventional in form. Characters shall not be italic, oblique, script, highly decorative, or of other unusual forms.

***11B*-703.5.4 Character proportions.** Characters shall be selected from fonts where the width of the uppercase letter "O" is *60* percent minimum and 110 percent maximum of the height of the uppercase letter "I".

***11B*-703.5.5 Character height.** Minimum character height shall comply with Table *11B*-703.5.5. Viewing distance shall be measured as the horizontal distance between the character and an obstruction preventing further approach towards the sign. Character height shall be based on the uppercase letter "I".

Exception: *Where provided, floor plans providing emergency procedures information in accordance with Title 19 shall not be required to comply with Section 11B-703.5.5.*

Table *11B*-703.5.5 Visual Character Height

Height to Finish Floor or Ground From Baseline of Character	Horizontal Viewing Distance	Minimum Character Height
40 inches (*1016* mm) to less than or equal to 70 inches (*1778* mm)	less than 72 inches (*1829* mm)	5/8 inch (*15.9* mm)
	72 inches (*1829* mm) and greater	5/8 inch (*15.9* mm), plus 1/8 inch (3.2 mm) per foot (305 mm) of viewing distance above 72 inches (*1829* mm)
Greater than 70 inches (*1778* mm) to less than or equal to 120 inches (*3048* mm)	less than 180 inches (*4572* mm)	2 inches (51 mm)
	180 inches (*4572* mm) and greater	2 inches (51 mm), plus 1/8 inch (3.2 mm) per foot (305 mm) of viewing distance above 180 inches (*4572* mm)
greater than 120 inches (*3048* mm)	less than 21 feet (*6401* mm)	3 inches (*76* mm)
	21 feet (*6401* mm) and greater	3 inches (*76* mm), plus 1/8 inch (3.2 mm) per foot (305 mm) of viewing distance above 21 feet (*6401* mm)

***11B*-703.5.6 Height from finish floor or ground.** Visual characters shall be 40 inches (*1016* mm) minimum above the finish floor or ground.

Exceptions:

1. Visual characters indicating elevator car controls shall not be required to comply with *Section 11B*-703.5.6.

2. *Floor-level exit signs complying with Chapter 10, Section 1011.7 shall not be required to comply with Section 11B-703.5.6.*

3. *Where provided, floor plans providing emergency procedures information in accordance with Title 19 shall not be required to comply with Section 11B-703.5.6.*

***11B*-703.5.7 Stroke thickness.** Stroke thickness of the uppercase letter "I" shall be 10 percent minimum and *20* percent maximum of the height of the character.

***11B*-703.5.8 Character spacing.** Character spacing shall be measured between the two closest points of adjacent characters, excluding word spaces. Spacing between individual characters shall be 10 percent minimum and 35 percent maximum of character height.

***11B*-703.5.9 Line spacing.** Spacing between the baselines of separate lines of characters within a message shall be 135 percent minimum and 170 percent maximum of the character height.

11B-703.5.10 Format. *Text shall be in a horizontal format.*

***11B*-703.6 Pictograms.** Pictograms shall comply with *Section 11B*-703.6.

DSA

Advisory 11B-703.6 Pictograms. Pictograms and other symbols, such as the International Symbol of Accessibility (ISA), which are included on signs with raised characters and Braille are not required to be raised. The ISA, when included on a tactile sign, does not require any accompanying text, either visual or tactile. ■

***11B*-703.6.1 Pictogram field.** Pictograms shall have a field height of 6 inches (*152* mm) minimum. Characters and Braille shall not be located in the pictogram field.

DSA

Advisory 11B-703.6.1 Pictogram field. Pictograms include both a symbol and the field (or background) on which it is displayed. The 6-inch vertical dimension applies to the field, not the symbol. The symbol may be smaller than the field. The required equivalent verbal description must be placed below the pictogram, and may not intrude into the 6-inch field. ■

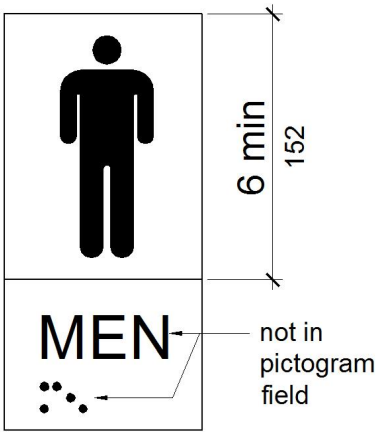

Figure *11B*-703.6.1
Pictogram Field

***11B*-703.6.2 Finish and contrast.** Pictograms and their field shall have a non-glare finish. Pictograms shall contrast with their field with either a light pictogram on a dark field or a dark pictogram on a light field.

> **USDOJ**
>
> **Advisory 11B-703.6.2 Finish and contrast.** Signs are more legible for persons with low vision when characters contrast as much as possible with their background. Additional factors affecting the ease with which the text can be distinguished from its background include shadows cast by lighting sources, surface glare, and the uniformity of the text and background colors and textures. ■

***11B*-703.6.3 Text descriptors.** Pictograms shall have text descriptors located directly below the pictogram field. Text descriptors shall comply with *Sections 11B*-703.2, *11B*-703.3 and *11B*-703.4.

***11B*-703.7 Symbols of accessibility.** Symbols of accessibility shall comply with *Section 11B*-703.7.

> **DSA**
>
> **Advisory 11B-703.7 Symbols of accessibility.** Symbols of accessibility, such as the International Symbol of Accessibility (ISA), which are included on signs with raised characters and Braille are not required to be raised. The ISA, when included on a tactile sign, does not require any accompanying text, either visual or tactile. ■

***11B*-703.7.1 Finish and contrast.** Symbols of accessibility and their background shall have a non-glare finish. Symbols of accessibility shall contrast with their background with either a light symbol on a dark background or a dark symbol on a light background.

> **USDOJ**
>
> **Advisory 11B-703.7.1 Finish and contrast.** Signs are more legible for persons with low vision when characters contrast as much as possible with their background. Additional factors affecting the ease with which the text can be distinguished from its background include shadows cast by lighting sources, surface glare, and the uniformity of the text and background colors and textures. ■

***11B*-703.7.2 Symbols.**

***11B*-703.7.2.1 International Symbol of Accessibility.** The International Symbol of Accessibility shall comply with Figure *11B*-703.7.2.1. *The symbol shall consist of a white figure on a blue background. The color blue shall approximate FS 15090 in Federal Standard 595C.*

Exceptions:

1. *The appropriate enforcement agency may approve other colors provided the symbol contrast is light on dark or dark on light.*

2. *On the accessibility function button on hall call consoles in a destination-oriented elevator system the International Symbol of Accessibility shall be a white symbol on a black background.*

Figure *11B*-703.7.2.1
International Symbol of Accessibility

DSA

Advisory 11B-703.7.2.1 International Symbol of Accessibility Exception. This exception provides latitude in the use of other colors, but artistic license in the graphic representation of the symbol itself is not permitted. ■

***11B*-703.7.2.2 International Symbol of TTY.** The International Symbol of TTY shall comply with Figure *11B*-703.7.2.2.

Figure *11B*-703.7.2.2
International Symbol of TTY

***11B*-703.7.2.3 Volume control telephones.** Telephones with a volume control shall be identified by a pictogram of a telephone handset with radiating sound waves on a square field such as shown in Figure *11B*-703.7.2.3.

Figure *11B*-703.7.2.3
Volume Control Telephone

***11B*-703.7.2.4 Assistive listening systems.** Assistive listening systems shall be identified by the International Symbol of Access for Hearing Loss complying with Figure *11B*-703.7.2.4.

Figure *11B*-703.7.2.4
International Symbol of Access for Hearing Loss

11B-703.7.2.5 Cleaner Air Symbol. *Rooms, facilities and paths of travel that are accessible to and usable by people who are adversely impacted by airborne chemicals or particulate(s) and/or the use of electrical fixtures and/or devices shall be identified by the Cleaner Air Symbol complying with Figure 11B-703.7.2.5. This symbol is to be used strictly for publicly funded facilities or any facilities leased or rented by state of California, not concessionaires.*

The symbol, which shall include the text "Cleaner Air" as shown, shall be displayed either as a negative or positive image within a square that is a minimum of 6 inches (152 mm) on each side. The symbol may be shown in black and white or in color. When color is used, it shall be Federal Blue (Color No. 15090 Federal Standard 595B) on white, or white on Federal Blue. There shall be at least a 70-percent color contrast between the background of the sign from the surface that it is mounted on.

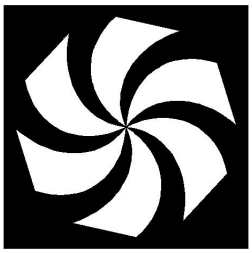

Cleaner Air

Figure 11B-703.7.2.5
Cleaner Air Symbol

11B-703.7.2.6 Toilet and bathing facilities geometric symbols. *Doorways leading to toilet rooms and bathing rooms shall be identified by a geometric symbol complying with Section 11B-703.7.2.6. The symbol shall be mounted at 58 inches (1473 mm) minimum and 60 inches (1524 mm) maximum above the finish floor or ground surface measured from the centerline of the symbol. Where a door is provided the symbol shall be mounted within 1 inch (25 mm) of the vertical centerline of the door.*

> ***Exception:*** *Geometric symbols shall not be required at inmate toilet rooms and bathing rooms in detention and correctional facilities where only one gender is housed.*

DSA

Advisory 11B-703.7.2.6 Toilet and bathing facilities geometric symbols. There is no requirement for providing gender pictograms in combination with the geometric identification symbols required at doorways leading to men's, women's and unisex toilet and bathing facilities.

When toilet and bathing facilities have doorway openings instead of doors, such as at airports or stadiums, the geometric identification symbol should be located at the proper height adjacent to the opening or incorporated into the required tactile identification sign. For

example, the geometric symbol may be used as the sign background with raised characters and Braille per Sections 11B-703.2 and 11B-703.3. ■

11B-703.7.2.6.1 Men's toilet and bathing facilities. *Men's toilet and bathing facilities shall be identified by an equilateral triangle, ¼ inch (6.4 mm) thick with edges 12 inches (305 mm) long and a vertex pointing upward. The triangle symbol shall contrast with the door, either light on a dark background or dark on a light background.*

Exception: *Within secure perimeter of detention and correctional facilities, geometric symbols shall not be required to be ¼ inch (6.4 mm) thick.*

11B-703.7.2.6.2 Women's toilet and bathing facilities. *Women's toilet and bathing facilities shall be identified by a circle, ¼ inch (6.4 mm) thick and 12 inches (305 mm) in diameter. The circle symbol shall contrast with the door, either light on a dark background or dark on a light background.*

Exception: *Within secure perimeter of detention and correctional facilities, geometric symbols shall not be required to be ¼ inch (6.4 mm) thick.*

11B-703.7.2.6.3 Unisex toilet and bathing facilities. *Unisex toilet and bathing facilities shall be identified by a circle, ¼ inch (6.4 mm) thick and 12 inches (305 mm) in diameter with a ¼ inch (6.4 mm) thick triangle with a vertex pointing upward superimposed on the circle and within the 12-inch (305 mm) diameter. The triangle symbol shall contrast with the circle symbol, either light on a dark background or dark on a light background. The circle symbol shall contrast with the door, either light on a dark background or dark on a light background.*

Exception: *Within secure perimeter of detention and correctional facilities, geometric symbols shall not be required to be ¼ inch (6.4 mm) thick.*

11B-703.7.2.6.4 Edges and corners. *Edges of signs shall be rounded, chamfered or eased. Corners of signs shall have a minimum radius of ⅛ inch (3.2 mm).*

11B-703.7.2.7 Pedestrian traffic-control buttons. *Pole-supported pedestrian traffic-control buttons shall be identified with color coding consisting of a textured horizontal yellow band 2 inches (51 mm) in width encircling the pole, and a 1-inch-wide (25 mm) dark border band above and below this yellow band. Color coding shall be placed immediately above the control button. Control buttons shall be located no higher than 48 inches (1219 mm) above the ground surface adjacent to the pole.*

11B-703.8 Variable message signs.

11B-703.8.1 General. *High resolution variable message sign (VMS) characters shall comply with Sections 11B-703.5 and 11B-703.8.12 through 11B-703.8.14. Low resolution variable message sign (VMS) characters shall comply with Section 11B-703.8.*

11B-703.8.2 Case. *Low resolution VMS characters shall be uppercase.*

11B-703.8.3 Style. *Low resolution VMS characters shall be conventional in form, shall be san serif, and shall not be italic, oblique, script, highly decorative, or of other unusual forms.*

11B-703.8.4 Character height. *The uppercase letter "I" shall be used to determine the allowable height of all low resolution VMS characters of a font. Viewing distance shall be measured as the horizontal distance between the character and an obstruction preventing further approach towards the sign. The uppercase letter "I" of the font shall have a minimum height complying with Table 11B-703.8.4.*

Exception: *In assembly seating where the maximum viewing distance is 100 feet (30.5 m) or greater, the height of the uppercase "I" of low resolution VMS fonts shall be permitted to be 1 inch*

(25 mm) for every 30 feet (9144 mm) of viewing distance, provided the character height is 8 inches (203 mm) minimum. Viewing distance shall be measured as the horizontal distance between the character and where someone is expected to view the sign.

Table 11B-703.8.4 Low Resolution VMS Character Height

Height Above Floor to Baseline of Character	Horizontal Viewing Distance	Minimum Character Height
40 inches (1016 mm) to less than or equal to 70 inches (1778 mm)	Less than 10 feet (3048 mm)	2 inches (51 mm)
	10 feet (3048 mm) and greater	2 inches (51 mm), plus 1/5 inch (5.1 mm) per foot (305 mm) of viewing distance above 10 feet (3048 mm)
Greater than 70 inches (1778 mm) to less than or equal to 120 inches (3048 mm)	Less than 15 feet (4572 mm)	3 inches (76 mm)
	15 feet (4572 mm) and greater	3 inches (76 mm), plus 1/5 inch (5.1 mm) per foot (305 mm) of viewing distance above 15 feet (4572 mm)
Greater than 120 inches (3048 mm)	Less than 20 feet (6096 mm)	4 inches (102 mm)
	20 feet (6096 mm) and greater	4 inches (102 mm), plus 1/5 inch (5.1 mm) per foot (305 mm) of viewing distance above 20 feet (6096 mm)

11B-703.8.5 Character width. *The uppercase letter "O" shall be used to determine the allowable width of all low resolution VMS characters of a font. Low resolution VMS characters shall comply with the pixel count for character width in Table 11B-703.8.5.*

Table 11B-703.8.5 Pixel Count for Low Resolution VMS Signage

Character Height	Character Width Range	Stroke Width Range	Character Spacing Range
7	5-6	1	2
8	6-7	1-2	2-3
9	6-8	1-2	2-3
10	7-9	2	2-4
11	8-10	2	2-4
12	8-11	2	3-4
13	9-12	2-3	3-5
14	10-13	2-3	3-5
15	11-14	2-3	3-5

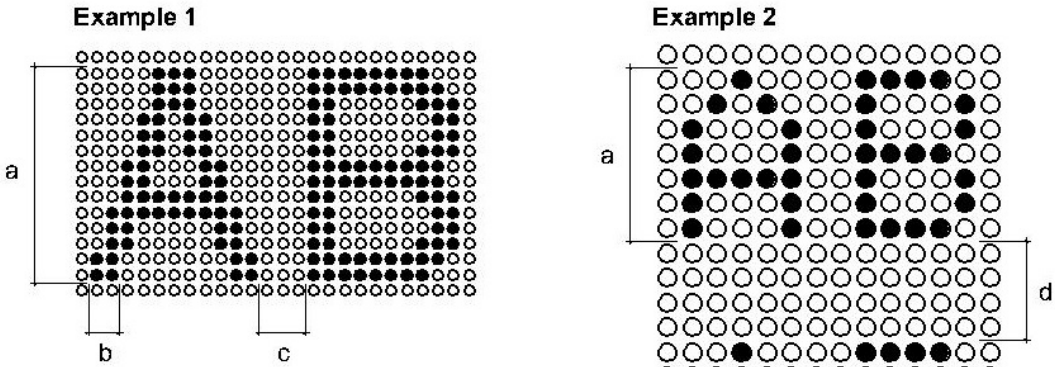

	Property	Example 1	Example 2
a	Character Height	14 Pixels	7 Pixels
b	Stroke Width	2 Pixels	1 Pixels
c	Character Spacing	3 Pixels	2 Pixels
d	Line Spacing		4 Pixels

Figure 11B-703.8.5
Low Resolution VMS Signage Characters

11B-703.8.6 Stroke width. *The uppercase letter "I" shall be used to determine the allowable stroke width of all low resolution VMS characters of a font. Low resolution VMS characters shall comply with the pixel count for stroke width in Table 11B-703.8.5.*

11B-703.8.7 Character spacing. *Spacing shall be measured between the two closest points of adjacent low resolution VMS characters within a message, excluding word spaces. Low resolution VMS character spacing shall comply with the pixel count for character spacing in Table 11B-703.8.5.*

11B-703.8.8 Line spacing. *Low resolution VMS characters shall comply with Section 11B-703.5.9.*

11B-703.8.9 Height above floor. *Low resolution VMS characters shall be 40 inches (1016 mm) minimum above the floor of the viewing position, measured to the baseline of the character. Heights of low resolution variable message sign characters shall comply with Table 11B-703.8.4, based on the size of the characters on the sign.*

11B-703.8.10 Finish. *The background of low resolution VMS characters shall have a non-glare finish.*

11B-703.8.11 Contrast. *Low resolution VMS characters shall be light characters on a dark background.*

11B-703.8.12 Protective covering. *Where a protective layer is placed over VMS characters through which the VMS characters must be viewed, the protective covering shall have a non-glare finish.*

11B-703.8.13 Brightness. *The brightness of variable message signs in exterior locations shall automatically adjust in response to change in ambient light levels.*

11B-704 Telephones

***11B*-704.1 General.** Public telephones shall comply with *Section 11B*-704.

***11B*-704.2 Wheelchair accessible telephones.** Wheelchair accessible telephones shall comply with *Section 11B*-704.2.

***11B*-704.2.1 Clear floor or ground space.** A clear floor or ground space complying with *Section 11B*-305 shall be provided. The clear floor or ground space shall not be obstructed by bases, enclosures, or seats.

USDOJ

Advisory 11B-704.2.1 Clear floor or ground space. Because clear floor and ground space is required to be unobstructed, telephones, enclosures and related telephone book storage cannot encroach on the required clear floor or ground space and must comply with the provisions for protruding objects. (See Section 11B-307). ■

***11B*-704.2.1.1 Parallel approach.** Where a parallel approach is provided, the distance from the edge of the telephone enclosure to the face of the telephone unit shall be 10 inches (*254* mm) maximum.

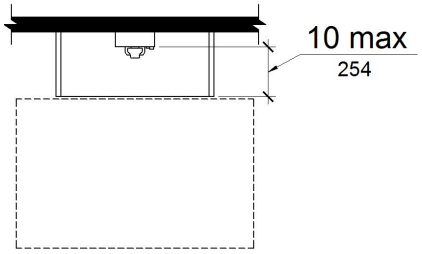

Figure *11B*-704.2.1.1
Parallel Approach to Telephone

***11B*-704.2.1.2 Forward approach.** *Where a forward approach is provided at a telephone within an enclosure, the counter may extend beyond the face of the telephone 20 inches (508 mm) into the required clear floor or ground space and the enclosure may extend beyond the face of the telephone 24 inches (610 mm). If an additional 6 inches (152 mm) in width of clear floor space is provided, creating a clear floor space of 36 inches by 48 inches (914 mm by 1219 mm), the enclosure may extend more than 24 inches (610 mm) beyond the face of the telephone.*

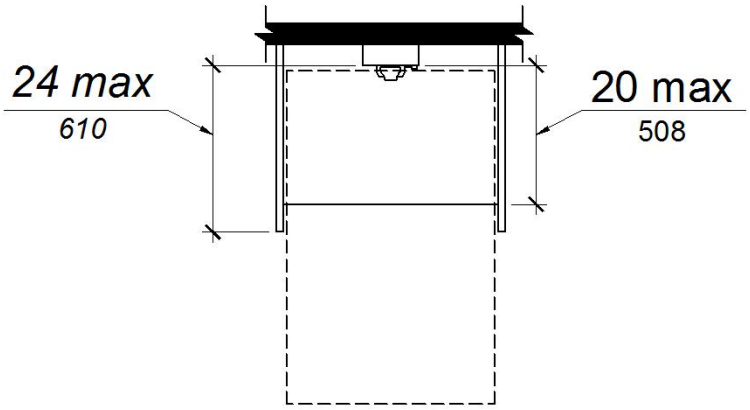

Figure *11B*-704.2.1.2

***11B*-704.2.2 Operable parts.** Operable parts shall comply with *Section 11B*-309. Telephones shall have push-button controls where such service is available.

***11B*-704.2.3 Telephone directories.** Telephone directories, where provided, shall be located in accordance with *Section 11B*-309.

***11B*-704.2.4 Cord length.** The cord from the telephone to the handset shall be 29 inches (*737* mm) long minimum.

***11B*-704.3 Volume control telephones.** Public telephones required to have volume controls shall be equipped with a receive volume control that provides a gain adjustable up to 20 dB minimum. For incremental volume control, provide at least one intermediate step of 12 dB of gain minimum. An automatic reset shall be provided. *Volume control telephones shall be equipped with a receiver that generates a magnetic field in the area of the receiver cap. Public telephones with volume control shall be hearing aid compatible.*

USDOJ

Advisory 11B-704.3 Volume control telephones. Amplifiers on pay phones are located in the base or the handset or are built into the telephone. Most are operated by pressing a button or key. If the microphone in the handset is not being used, a mute button that temporarily turns off the microphone can also reduce the amount of background noise which the person hears in the earpiece. If a volume adjustment is provided that allows the user to set the level anywhere from the base volume to the upper requirement of 20 dB, there is no need to specify a lower limit. If a stepped volume control is provided, one of the intermediate levels must provide 12 dB of gain. Consider compatibility issues when matching an amplified handset with a phone or phone system. Amplified handsets that can be switched with pay telephone handsets are available. Portable and in-line amplifiers can be used with some phones but are not practical at most public phones covered by these requirements. ■

***11B*-704.4 TTYs.** TTYs *provided* at a public pay telephone shall be permanently affixed within, or adjacent to, the telephone enclosure. Where an acoustic coupler is used, the telephone cord shall be sufficiently long to allow connection of the TTY and the telephone receiver.

USDOJ

Advisory 11B-704.4 TTYs. Ensure that sufficient electrical service is available where TTYs are to be installed. ■

***11B*-704.4.1 Height.** When in use, the touch surface of TTY keypads shall be 34 inches (*864* mm) minimum above the finish floor.

Exception: Where seats are provided, TTYs shall not be required to comply with *Section 11B*-704.4.1.

USDOJ

Advisory 11B-704.4.1 Height. A telephone with a TTY installed underneath cannot also be a wheelchair accessible telephone because the required 34 inches (865 mm) minimum keypad height can causes the highest operable part of the telephone, usually the coin slot, to exceed the maximum permitted side and forward reach ranges. (See Section 11B-308). ■

USDOJ

Advisory 11B-704.4.1 Height Exception. While seats are not required at TTYs, reading and typing at a TTY is more suited to sitting than standing. Facilities that often provide seats at TTY's include, but are not limited to, airports and other passenger terminals or stations, courts, art galleries, and convention centers. ■

***11B*-704.5 TTY shelf.** Public pay telephones required to accommodate portable TTYs shall be equipped with a shelf and an electrical outlet within or adjacent to the telephone enclosure. The telephone handset shall be capable of being placed flush on the surface of the shelf. The shelf shall be capable of accommodating a TTY and shall have 6 inches (*152* mm) minimum vertical clearance above the area where the TTY is to be placed.

11B*-705 Detectable warnings *and detectable directional texture

11B-705.1 Detectable warnings.

***11B-705.1.1* General.** Detectable warnings shall consist of a surface of truncated domes and shall comply with *Section 11B*-705.

***11B-705.1.1.1* Dome size.** Truncated domes in a detectable warning surface shall have a base diameter of 0.9 inch *(22.9 mm)* minimum and *0.92 inch (23.4 mm)* maximum, a top diameter of *0.45 inch (11.4 mm) minimum and 0.47 inch (11.9 mm) maximum*, and a height of *0.18 inch (4.6 mm) minimum and 0.22 inch (5.6 mm) maximum*.

***11B-705.1.1.2* Dome spacing.** Truncated domes in a detectable warning surface shall have a center-to-center spacing of *2.3 inches (58 mm)* minimum and 2.4 inches (61 mm) maximum, and a base-to-base spacing of 0.65 inch (*16.5* mm) minimum, measured between the most adjacent domes on a square grid.

Exception: *Where installed in a radial pattern, truncated domes shall have a center-to-center spacing of 1.6 inches (41 mm) minimum to 2.4 inches (61 mm) maximum.*

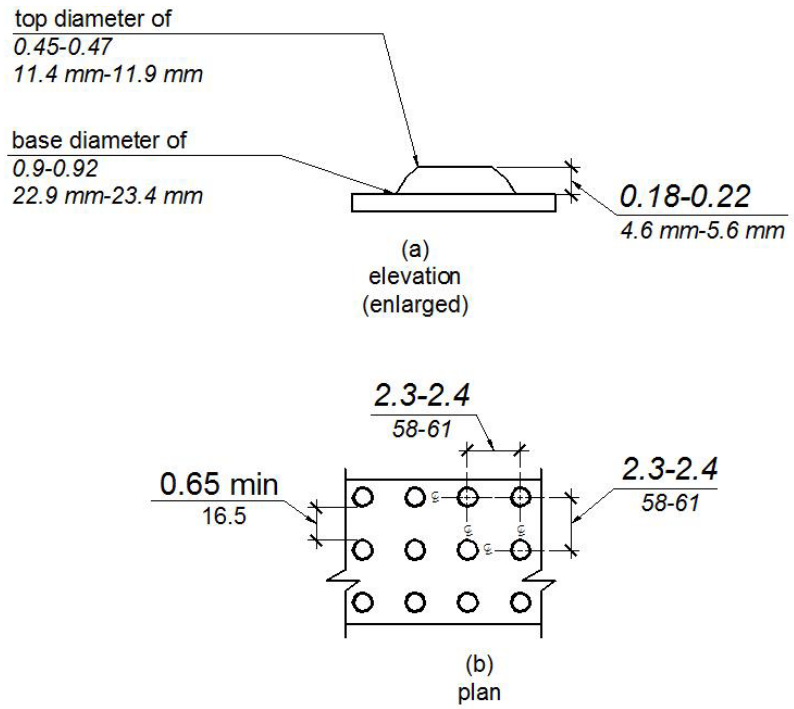

Figure *11B*-705.1
Size and Spacing of Truncated Domes

***11B-705.1.1.3 Color and* Contrast.** *Detectable warning surfaces at transit boarding platform edges, bus stops, hazardous vehicular areas, reflecting pools, and track crossings shall comply with Section 11B-705.1.1.3.1. Detectable warnings at other locations shall comply with either Section 11B-705.1.1.3.1 or Section 11B-705.1.1.3.2. The material used to provide visual contrast shall be an integral part of the surface.*

11B-705.1.1.3.1 *Detectable warning surfaces shall be yellow and approximate FS 33538 of Federal Standard 595C.*

11B-705.1.1.3.2 Detectable warning surfaces shall *provide a 70 percent minimum visual* contrast with adjacent walking surfaces*. Contrast in percent shall be determined by:*

Contrast percent = [(B1-B2)/B1] x 100 where
B1 = light reflectance value (LRV) of the lighter area and
B2 = light reflectance value (LRV) of the darker area.

Exception: *Where the detectable warning surface does not provide a 70 percent minimum contrast with adjacent walking surfaces, a 1 inch (25 mm) wide minimum visually contrasting surface shall separate the detectable warning from adjacent walking surfaces. The visually contrasting surface shall contrast with both the detectable warning and adjacent walking surfaces either light-on-dark, or dark-on-light.*

11B-705.1.1.4 Resiliency. *Detectable warning surfaces shall differ from adjoining surfaces in resiliency or sound-on-cane contact.*

Exception: *Detectable warning surfaces at curb ramps, islands or cut-through medians shall not be required to comply with Section 11B-705.1.1.4.*

11B-705.1.2 Locations. *Detectable warnings at the following locations shall comply with Section 11B-705.1.*

***11B-705.1.2.1* Platform edges.** Detectable warning surfaces at platform boarding edges shall be 24 inches (610 mm) wide and shall extend the full length of the public use areas of the platform.

11B-705.1.2.2 Curb ramps. *Detectable warnings at curb ramps shall extend 36 inches (914 mm) in the direction of travel. Detectable warnings shall extend the full width of the ramp run less 2 inches (51 mm) maximum on each side, excluding any flared sides. Detectable warnings shall be located so the edge nearest the curb is 6 inches (152 mm) minimum and 8 inches (203 mm) maximum from the line at the face of the curb marking the transition between the curb and the gutter, street or highway.*

> ***Exception:*** *On parallel curb ramps, detectable warnings shall be placed on the turning space at the flush transition between the street and sidewalk. Detectable warnings shall extend the full width of the turning space at the flush transition between the street and the sidewalk less 2 inches (51 mm) maximum on each side.*

11B-705.1.2.3 Islands or cut-through medians. *Detectable warnings at pedestrian islands or cut-through medians shall be 36 inches (914 mm) minimum in depth extending the full width of the pedestrian path or cut-through less 2 inches (51 mm) maximum on each side, placed at the edges of the pedestrian island or cut-through median, and shall be separated by 24 inches (610 mm) minimum of walking surface without detectable warnings.*

> ***Exception:*** *Detectable warnings shall be 24 inches (610 mm) minimum in depth at pedestrian islands or cut-through medians that are less than 96 inches (2438 mm) in length in the direction of pedestrian travel.*

11B-705.1.2.4 Bus stops. *When detectable warnings are provided at bus stop boarding and alighting areas, the detectable warnings shall extend the full width of the boarding/alighting area and shall be 36 inches (914 mm) minimum in depth.*

11B-705.1.2.5 Hazardous vehicular areas. *Detectable warnings at hazardous vehicular areas shall be 36 inches (914 mm) in width.*

11B-705.1.2.6 Reflecting pools. *When detectable warnings are provided at reflecting pools, it shall be 24 inches (610 mm) minimum and 36 inches (914 mm) maximum in width.*

11B-705.1.2.7 Track crossings. *Detectable warnings at track crossings shall be 36 inches (914 mm) in the direction of pedestrian travel and extend the full width of the circulation path.*

11B-705.2 Detectable directional texture. *Detectable directional texture at transit boarding platforms shall comply with Figure 11B-705.2 and shall be 0.1 inch (2.5 mm) in height that tapers off to 0.04 inch (1.0 mm), with bars raised 0.2 inch (5.1 mm) from the surface. The raised bars shall be 1.3 inches (33 mm) wide and 3 inches (76 mm) from center-to-center of each bar. This surface shall differ from adjoining walking surfaces in resiliency or sound-on-cane contact. The color shall be yellow and approximate FS 33538 of Federal Standard 595C. This surface will be placed directly behind the yellow detectable warning texture specified in Section 11B-705.1.2.1, aligning with all doors of the transit vehicles where passengers will embark. The width of the directional texture shall be equal to the width of the transit vehicle's door opening. The depth of the texture shall not be less than 36 inches (914 mm).*

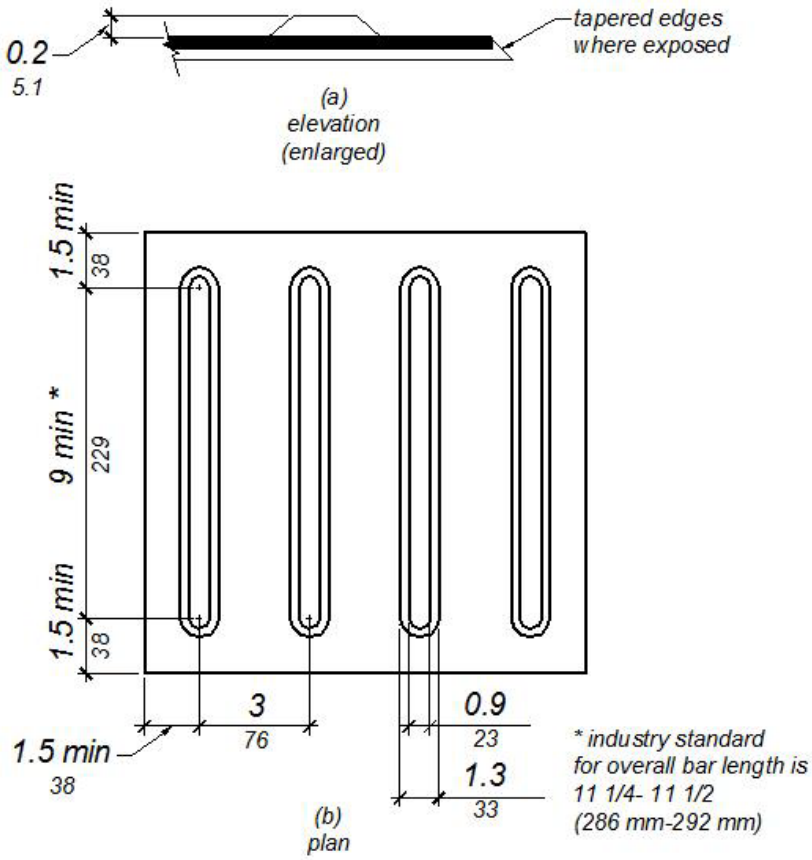

Figure 11B-705.2
Detectable Directional Texture

11B-705.3 Product approval. *Only approved DSA-AC detectable warning products and directional surfaces shall be installed as provided in the California Code of Regulations (CCR), Title 24, Part 1, Chapter 5, Articles 2, 3 and 4. Refer to CCR Title 24, Part 12, Chapter 11B, Section 12, 11B.205 for building and facility access specifications for product approval for detectable warning products and directional surfaces.*

11B-706 Assistive listening systems

***11B*-706.1 General.** Assistive listening systems required in assembly areas*, conference and meeting rooms* shall comply with *Section 11B*-706.

USDOJ

Advisory 11B-706.1 General. Assistive listening systems are generally categorized by their mode of transmission. There are hard-wired systems and three types of wireless systems: induction loop, infrared, and FM radio transmission. Each has different advantages and disadvantages that can help determine which system is best for a given application. For example, an FM system may be better than an infrared system in some open-air assemblies since infrared signals are less effective in sunlight. On the other hand, an infrared system is typically a better choice than an FM system where confidential transmission is important because it will be contained within a given space.

The technical standards for assistive listening systems describe minimum performance levels for volume, interference, and distortion. Sound pressure levels (SPL), expressed in decibels,

measure output sound volume. Signal-to-noise ratio (SNR or S/N), also expressed in decibels, represents the relationship between the loudness of a desired sound (the signal) and the background noise in a space or piece of equipment. The higher the SNR, the more intelligible the signal. The peak clipping level limits the distortion in signal output produced when high-volume sound waves are manipulated to serve assistive listening devices.

Selecting or specifying an effective assistive listening system for a large or complex venue requires assistance from a professional sound engineer. The federal Access Board has published technical assistance on assistive listening devices and systems. ■

***11B*-706.2 Receiver jacks.** Receivers required for use with an assistive listening system shall include a 1/8 inch (3.2 mm) standard mono jack.

***11B*-706.3 Receiver hearing-aid compatibility.** Receivers required to be hearing-aid compatible shall interface with telecoils in hearing aids through the provision of neckloops.

USDOJ

Advisory 11B-706.3 Receiver hearing-aid compatibility. Neckloops and headsets that can be worn as neckloops are compatible with hearing aids. Receivers that are not compatible include earbuds, which may require removal of hearing aids, earphones, and headsets that must be worn over the ear, which can create disruptive interference in the transmission and can be uncomfortable for people wearing hearing aids. ■

***11B*-706.4 Sound pressure level.** Assistive listening systems shall be capable of providing a sound pressure level of 110 dB minimum and 118 dB maximum with a dynamic range on the volume control of 50 dB.

***11B*-706.5 Signal-to-noise ratio.** The signal-to-noise ratio for internally generated noise in assistive listening systems shall be 18 dB minimum.

***11B*-706.6 Peak clipping level.** Peak clipping shall not exceed 18 dB of clipping relative to the peaks of speech.

11B*-707 Automatic teller machines, fare machines *and point-of-sale devices

USDOJ

Advisory 707 Automatic teller machines and fare machines. Interactive transaction machines (ITMs), other than ATMs, are not covered by Section 707. However, for entities covered by the ADA, the Department of Justice regulations that implement the ADA provide additional guidance regarding the relationship between these requirements and elements that are not directly addressed by these requirements. Federal procurement law requires that ITMs purchased by the Federal government comply with standards issued by the Access Board under Section 508 of the Rehabilitation Act of 1973, as amended. This law covers a variety of products, including computer hardware and software, websites, phone systems, fax machines, copiers, and similar technologies. For more information on Section 508 consult the Access Board's website at **www.access-board.gov**. ■

***11B*-707.1 General.** Automatic teller machines, fare machines *and point-of-sale devices* shall comply with *Section 11B*-707.

USDOJ

Advisory 11B-707.1 General. If farecards have one tactually distinctive corner they can be inserted with greater accuracy. Token collection devices that are designed to accommodate tokens which are perforated can allow a person to distinguish more readily between tokens and common coins. Place accessible gates and fare vending machines in close proximity to other accessible elements when feasible so the facility is easier to use. ■

***11B*-707.2 Clear floor or ground space.** A clear floor or ground space complying with *Section 11B*-305 shall be provided.

Exception: Clear floor or ground space shall not be required at drive-up only automatic teller machines and fare machines.

***11B*-707.3 Operable parts.** Operable parts shall comply with *Section 11B*-309. Unless a clear or correct key is provided, each operable part shall be able to be differentiated by sound or touch, without activation.

Exception: Drive-up only automatic teller machines and fare machines shall not be required to comply with *Sections 11B*-309.2 and *11B*-309.3.

***11B*-707.4 Privacy.** Automatic teller machines shall provide the opportunity for the same degree of privacy of input and output available to all individuals.

USDOJ

Advisory 11B-707.4 Privacy. In addition to people who are blind or visually impaired, people with limited reach who use wheelchairs or have short stature, who cannot effectively block the ATM screen with their bodies, may prefer to use speech output. Speech output users can benefit from an option to render the visible screen blank, thereby affording them greater personal security and privacy. ■

***11B*-707.5 Speech output.** Machines shall be speech enabled. Operating instructions and orientation, visible transaction prompts, user input verification, error messages, and all displayed information for full use shall be accessible to and independently usable by individuals with vision impairments. Speech shall be delivered through a mechanism that is readily available to all users, including but not limited to, an industry standard connector or a telephone handset. Speech shall be recorded or digitized human, or synthesized.

Exceptions:

1. Audible tones shall be permitted instead of speech for visible output that is not displayed for security purposes, including but not limited to, asterisks representing personal identification numbers.

2. Advertisements and other similar information shall not be required to be audible unless they convey information that can be used in the transaction being conducted.

3. Where speech synthesis cannot be supported, dynamic alphabetic output shall not be required to be audible.

USDOJ

Advisory 11B-707.5 Speech output. If an ATM provides additional functions such as dispensing coupons, selling theater tickets, or providing copies of monthly statements, all such functions must be available to customers using speech output. To avoid confusion at the ATM, the method of initiating the speech mode should be easily discoverable and should not require specialized training. For example, if a telephone handset is provided, lifting the

handset can initiate the speech mode. ■

***11B*-707.5.1 User control.** Speech shall be capable of being repeated or interrupted. Volume control shall be provided for the speech function.

Exception: Speech output for any single function shall be permitted to be automatically interrupted when a transaction is selected.

***11B*-707.5.2 Receipts.** Where receipts are provided, speech output devices shall provide audible balance inquiry information, error messages, and all other information on the printed receipt necessary to complete or verify the transaction.

Exceptions:

1. Machine location, date and time of transaction, customer account number, and the machine identifier shall not be required to be audible.

2. Information on printed receipts that duplicates information available on-screen shall not be required to be presented in the form of an audible receipt.

3. Printed copies of bank statements and checks shall not be required to be audible.

***11B*-707.6 Input.** Input devices shall comply with *Section 11B*-707.6.

***11B*-707.6.1 Input controls.** At least one tactilely discernible input control shall be provided for each function. Where provided, key surfaces not on active areas of display screens, shall be raised above surrounding surfaces. Where membrane keys are the only method of input, each shall be tactilely discernible from surrounding surfaces and adjacent keys.

***11B*-707.6.2 Numeric keys.** Numeric keys shall be arranged in a 12-key ascending or descending telephone keypad layout. The number five key shall be tactilely distinct from the other keys.

USDOJ

Advisory 11B-707.6.2 Numeric keys. Telephone keypads and computer keyboards differ in one significant feature, ascending versus descending numerical order. Both types of keypads are acceptable, provided the computer-style keypad is organized similarly to the number pad located at the right on most computer keyboards, and does not resemble the line of numbers located above the computer keys. ■

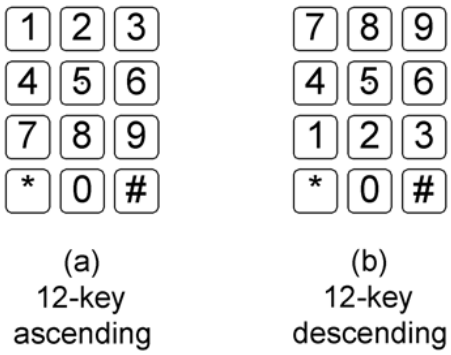

Figure *11B*-707.6.2
Numeric Key Layout

***11B*-707.6.3 Function keys.** Function keys shall comply with *Section 11B*-707.6.3.

***11B*-707.6.3.1 Contrast.** Function keys shall contrast visually from background surfaces. Characters and symbols on key surfaces shall contrast visually from key surfaces. Visual contrast shall be either light-on-dark or dark-on-light.

Exception: Tactile symbols required by *Section 11B*-707.6.3.2 shall not be required to comply with *Section 11B*-707.6.3.1.

***11B*-707.6.3.2 Tactile symbols.** Function key surfaces shall have tactile symbols as follows: Enter or Proceed key: raised circle; Clear or Correct key: raised left arrow; Cancel key: raised letter ex; Add Value key: raised plus sign; Decrease Value key: raised minus sign.

***11B*-707.7 Display screen.** The display screen shall comply with *Section 11B*-707.7.

Exception: Drive-up only automatic teller machines and fare machines shall not be required to comply with *Section 11B*-707.7.1.

***11B*-707.7.1 Visibility.** The display screen shall be visible from a point located 40 inches (*1016* mm) above the center of the clear floor space in front of the machine.

11B-707.7.1.1 Vertically mounted display screen. *Where display screens are mounted vertically or no more than 30 degrees tipped away from the viewer, the center line of the display screen and other display devices shall be no more than 52 inches (1321 mm) above the floor or ground surface.*

11B-707.7.1.2 Angle-mounted display screen. *Where display screens are mounted between 30 degrees and 60 degrees tipped away from the viewer, the center line of the display screen and other display devices shall be no more than 44 inches (1118 mm) above the floor or ground surface.*

11B-707.7.1.3 Horizontally mounted display screen. *Where display screens are mounted no less than 60 degrees and no more than 90 degrees (horizontal) tipped away from the viewer, the center line of the display screen and other display devices shall be no more than 34 inches (864 mm) above the floor or ground surface.*

***11B*-707.7.2 Characters.** Characters displayed on the screen shall be in a sans serif font. Characters shall be 3/16 inch (4.8 mm) high minimum based on the uppercase letter "I". Characters shall contrast with their background with either light characters on a dark background or dark characters on a light background.

***11B*-707.8 Braille instructions.** Braille instructions for initiating the speech mode shall be provided. Braille shall comply with *Section 11B*-703.3.

11B-707.9 Point-of-sale devices. *Point-of-sale devices shall comply with Section 11B-707.9.*

11B-707.9.1 General. *Where point-of-sale devices are provided, all devices at each location shall comply with Sections 11B-309.4, 11B-707.3, and 11B-707.7.2. In addition, point-of-sale systems that include a video touch screen or any other non-tactile keypad shall be equipped with either of the following:*

11B-707.9.1.1 Tactilely discernible numerical keypad. *A tactilely discernible numerical keypad similar to a telephone keypad containing a raised dot with a dot base diameter between 1.5 mm and 1.6 mm and a height between 0.6 mm and 0.9 mm on the number 5 key that enables a visually impaired person to enter his or her own personal identification number or any other personal information necessary to process the transaction in a manner that provides the opportunity for the same degree of privacy input and output available to all individuals.*

11B-707.9.1.2 Other technology. *Other technology, such as a radio frequency identification device, fingerprint biometrics, or some other mechanism that enables a visually impaired person to access the video touch screen device with his or her personal identifier and to process his or her transaction in a manner that provides the opportunity for the same degree of privacy input and output available to all individuals. Where a video screen overlay is provided it shall be equipped with a tactilely discernible numerical keypad complying with Section 11B-707.9.1.1.*

11B-707.9.2 Point-of-sale devices at check stands and sales or service counters. *Where point-of-sale devices are provided at check stands and sales or service counters, they shall comply with Section 11B-707.9.1, and shall also comply with Sections 11B-707.2, 11B-707.3 and 11B-707.4.*

***11B*-708 Two-way communication systems**

***11B*-708.1 General.** Two-way communication systems shall comply with *Section 11B*-708.

USDOJ

Advisory 11B-708.1 General. Devices that do not require handsets are easier to use by people who have a limited reach. ■

***11B*-708.2 Audible and visual indicators.** The system shall provide both audible and visual signals.

USDOJ

Advisory 11B-708.2 Audible and visual indicators. A light can be used to indicate visually that assistance is on the way. Signs indicating the meaning of visual signals should be provided. ■

***11B*-708.3 Handsets.** Handset cords, if provided, shall be 29 inches (*737* mm) long minimum.

***11B*-708.4 Residential dwelling unit communication systems.** Communications systems between a residential dwelling unit and a site, building, or floor entrance shall comply with *Section 11B*-708.4.

***11B*-708.4.1 Common use or public use system interface.** The common use or public use system interface shall include the capability of supporting voice and TTY communication with the residential dwelling unit interface.

***11B*-708.4.2 Residential dwelling unit interface.** The residential dwelling unit system interface shall include a telephone jack capable of supporting voice and TTY communication with the common use or public use system interface.

***11B*-801 General**

***11B*-801.1 Scope.** The provisions of *Division* 8 shall apply where required by *Division* 2 or where referenced by a requirement in this *chapter*.

USDOJ

Advisory 11B-801.1 Scope. Facilities covered by these requirements are also subject to the requirements of the other chapters. For example, Section 11B-806 addresses guest rooms in transient lodging facilities while Section 11B-902 contains the technical specifications for dining surfaces. If a transient lodging facility contains a restaurant, the restaurant must comply with requirements in other chapters such as those applicable to certain dining surfaces. ■

11B*-802 Wheelchair spaces, companion seats, designated aisle seats *and semi-ambulant seats

***11B*-802.1 Wheelchair spaces.** Wheelchair spaces shall comply with *Section 11B*-802.1.

***11B*-802.1.1 Floor or ground surface.** The floor or ground surface of wheelchair spaces shall comply with *Section 11B*-302. Changes in level are not permitted.

Exception: Slopes not steeper than 1:48 shall be permitted.

***11B*-802.1.2 Width.** A single wheelchair space shall be 36 inches (*914* mm) wide minimum. Where two adjacent wheelchair spaces are provided, each wheelchair space shall be 33 inches (*838* mm) wide minimum.

DSA

Advisory 11B-802.1.2 Width. Figure 11B-802.1.2 (b) depicts paired wheelchair spaces requiring a total of 66 inches in width. It should be noted that although side access to the wheelchair space is allowed, fixed companion seating also must be provided adjacent to each wheelchair space. ■

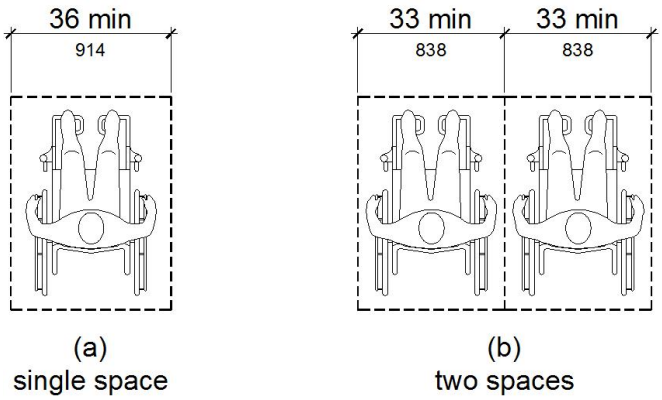

Figure *11B*-802.1.2
Width of Wheelchair Spaces

***11B*-802.1.3 Depth.** Where a wheelchair space can be entered from the front or rear, the wheelchair space shall be 48 inches (*1219* mm) deep minimum. Where a wheelchair space can be entered only from the side, the wheelchair space shall be 60 inches (*1524* mm) deep minimum.

DSA

Advisory 11B-802.1.3 Depth. Figure 11B-802.1.3 (b) depicts a single wheelchair space with side entry. A single wheelchair location space with side entry must functionally be usable as if it were within an alcove, requiring the user to maneuver back and forth to get into position, and thus 60 inches in length allows the added room to do that. A rear or front entry wheelchair space, as depicted in Figure 11B-802.1.3 (a) can have a shorter length (48 inches) of maneuvering area. Consideration should be given to the alignment of the wheelchair space and the adjacent companion seat which may require the rear tires of the wheelchair to project behind the back of the companion seat to achieve shoulder-to-shoulder alignment. See Section 11B-802.3.1. ■

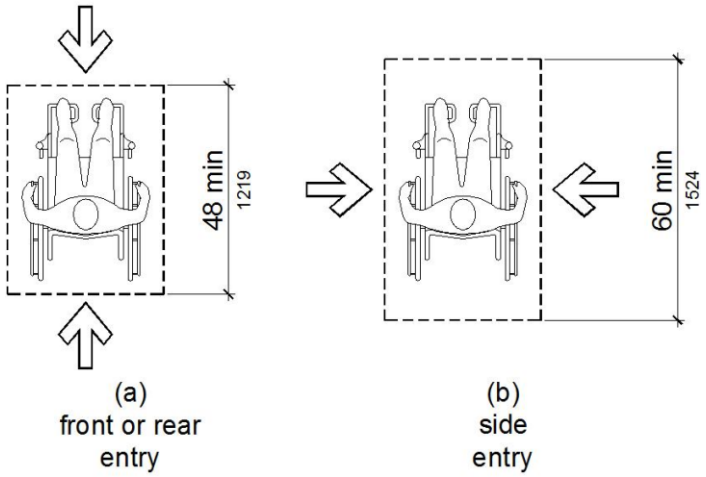

Figure *11B*-802.1.3
Depth of Wheelchair Spaces

***11B*-802.1.4 Approach.** Wheelchair spaces shall adjoin accessible routes. Accessible routes shall not overlap wheelchair spaces.

USDOJ

Advisory 11B-802.1.4 Approach. Because accessible routes serving wheelchair spaces are not permitted to overlap the clear floor space at wheelchair spaces, access to any wheelchair space cannot be through another wheelchair space. ■

***11B*-802.1.5 Overlap.** Wheelchair spaces shall not overlap circulation paths.

USDOJ

Advisory 11B-802.1.5 Overlap. The term "circulation paths" used in Section 11B-802.1.5 means aisle width required by applicable building or life safety codes for the specific assembly occupancy. Where the circulation path provided is wider than the required aisle width, the wheelchair space may intrude into that portion of the circulation path that is provided in excess of the required aisle width. ■

***11B*-802.2 Lines of sight.** Lines of sight to the screen, performance area, or playing field for spectators in wheelchair spaces shall comply with *Section 11B*-802.2.

***11B*-802.2.1 Lines of sight over seated spectators.** Where spectators are expected to remain seated during events, spectators in wheelchair spaces shall be afforded lines of sight complying with *Section 11B*-802.2.1.

***11B*-802.2.1.1 Lines of sight over heads.** Where spectators are provided lines of sight over the heads of spectators seated in the first row in front of their seats, spectators seated in wheelchair spaces shall be afforded lines of sight over the heads of seated spectators in the first row in front of wheelchair spaces.

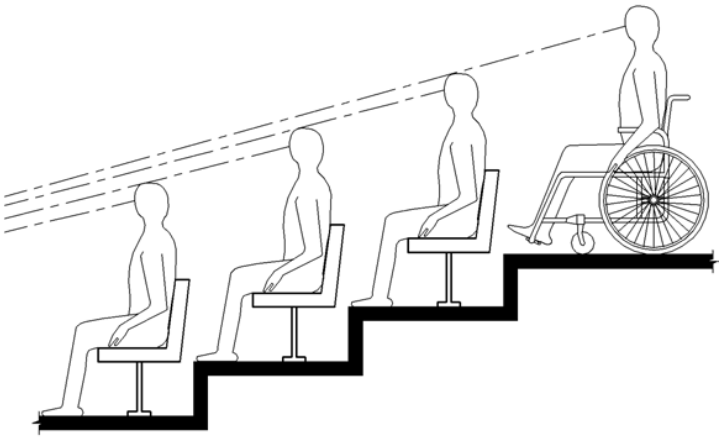

Figure *11B*-802.2.1.1
Lines of Sight Over the Heads of Seated Spectators

***11B*-802.2.1.2 Lines of sight between heads.** Where spectators are provided lines of sight over the shoulders and between the heads of spectators seated in the first row in front of their seats, spectators seated in wheelchair spaces shall be afforded lines of sight over the shoulders and between the heads of seated spectators in the first row in front of wheelchair spaces.

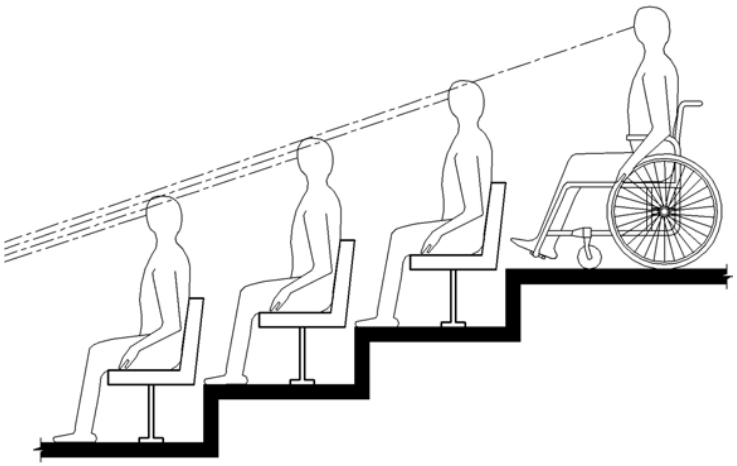

Figure *11B*-802.2.1.2
Lines of Sight Between the Heads of Seated Spectators

***11B*-802.2.2 Lines of sight over standing spectators.** Where spectators are expected to stand during events, spectators in wheelchair spaces shall be afforded lines of sight complying with *Section 11B*-802.2.2.

***11B*-802.2.2.1 Lines of sight over heads.** Where standing spectators are provided lines of sight over the heads of spectators standing in the first row in front of their seats, spectators seated in wheelchair spaces shall be afforded lines of sight over the heads of standing spectators in the first row in front of wheelchair spaces.

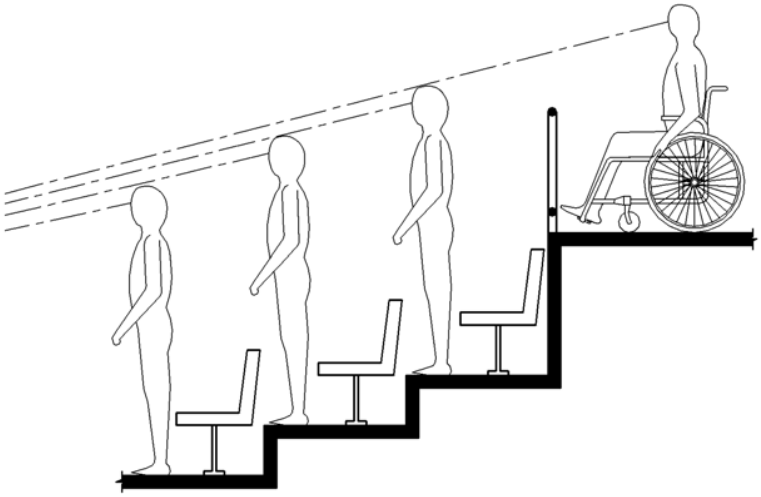

Figure *11B*-802.2.2.1
Lines of Sight Over the Heads of Standing Spectators

***11B*-802.2.2.2 Lines of sight between heads.** Where standing spectators are provided lines of sight over the shoulders and between the heads of spectators standing in the first row in front of their seats, spectators seated in wheelchair spaces shall be afforded lines of sight over the shoulders and between the heads of standing spectators in the first row in front of wheelchair spaces.

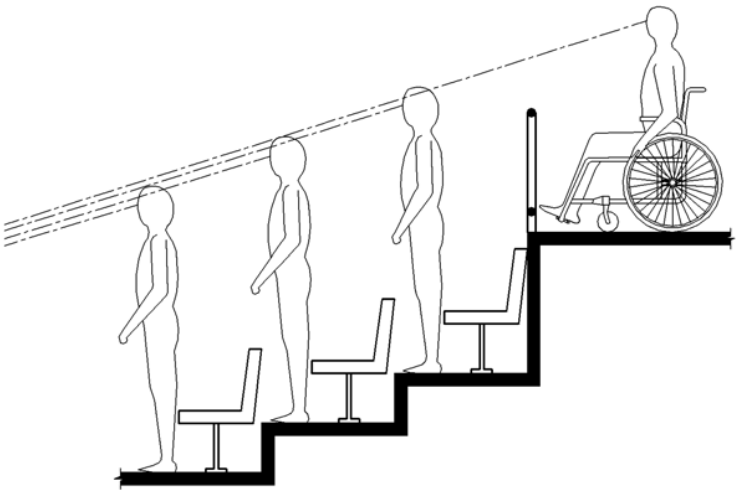

Figure *11B*-802.2.2.2
Lines of Sight Between the Heads of Standing Spectators

***11B*-802.3 Companion seats.** Companion seats shall comply with *Section 11B*-802.3.

***11B*-802.3.1 Alignment.** In row seating, companion seats shall be located to provide shoulder alignment with adjacent wheelchair spaces. The shoulder alignment point of the wheelchair space shall be measured 36 inches (*914* mm) from the front of the wheelchair space. The floor surface of the companion seat shall be at the same elevation as the floor surface of the wheelchair space.

***11B*-802.3.2 Type.** Companion seats shall be equivalent in size, quality, comfort, and amenities to the seating in the immediate area. Companion seats shall be permitted to be movable.

***11B*-802.4 Designated aisle seats.** Designated aisle seats shall comply with *Section 11B*-802.4.

***11B*-802.4.1 Armrests.** Where armrests are provided on the seating in the immediate area, folding or retractable armrests shall be provided on the aisle side of the seat.

***11B*-802.4.2 Identification.** Each designated aisle seat shall be identified by a sign or marker *with the International Symbol of Accessibility complying with Section 11B-703.7.2.1. Signage complying with Section 11B-703.5, notifying patrons of the availability of such seats shall be posted at the ticket office.*

USDOJ

Advisory 11B-802.4.2 Identification. Seats with folding or retractable armrests are intended for use by individuals who have difficulty walking. Consider identifying such seats with signs that contrast (light-on-dark or dark-on-light) and that are also photo luminescent. ■

DSA

Advisory 11B-802.4.2 Identification. Signage notifying patrons of the availability of aisle seats shall be posted at the ticket office. If there is no ticket office, the functional equivalent would be in the lobby or at the entrance to the assembly area in a conspicuous location. ■

11B-802.5 Semi-ambulant seats. *Semi-ambulant seats shall provide at least 24 inches (610 mm) clear leg space between the front of the seat to the nearest obstruction or to the back of the seat immediately in front.*

***11B*-803 Dressing, fitting, and locker rooms**

***11B*-803.1 General.** Dressing, fitting, and locker rooms shall comply with *Section 11B*-803.

USDOJ

Advisory 11B-803.1 General. Partitions and doors should be designed to ensure people using accessible dressing and fitting rooms privacy equivalent to that afforded other users of the facility. Section 11B-903.5 requires dressing room bench seats to be installed so that they are at the same height as a typical wheelchair seat, 17 inches (430 mm) to 19 inches (485 mm). However, wheelchair seats can be lower than dressing room benches for people of short stature or children using wheelchairs. ■

***11B*-803.2 Turning space.** Turning space complying with *Section 11B*-304 shall be provided within the room.

***11B*-803.3 Door swing.** Doors shall not swing into the room unless a *turning* space complying with *Section 11B-304.3* is provided beyond the arc of the door swing.

***11B*-803.4 Benches.** A bench complying with *Section 11B*-903 shall be provided within the room.

***11B*-803.5 Coat hooks and shelves.** Coat hooks provided within the room shall be located within one of the reach ranges specified in *Section 11B*-308. Shelves shall be 40 inches (*1016* mm) minimum and 48 inches (*1219* mm) maximum above the finish floor or ground. *Coat hooks shall not be located above the bench or other seating in the room.*

11B-803.6 Mirrors. *Mirrors shall be installed with the bottom edge of the reflecting surface 20 inches (508 mm) maximum above the finish floor or ground. Mirrors shall be full length with a reflective surface 18 inches (457 mm) wide minimum by 54 inches (1372 mm) high minimum and shall be mounted in a position affording a view to a person on the bench as well as to a person in a standing position.*

11B*-804 Kitchens, kitchenettes*, and wet bars.

***11B*-804.1 General.** Kitchens*,* kitchenettes*, and wet bars* shall comply with *Section 11B*-804.

***11B*-804.2 Clearance.** Where a pass through kitchen is provided, clearances shall comply with *Section 11B*-804.2.1. Where a U-shaped kitchen is provided, clearances shall comply with *Section 11B*-804.2.2.

Exception: Spaces that do not provide a cooktop or conventional range shall not be required to comply with *Section 11B*-804.2.

USDOJ

Advisory 11B-804.2 Clearance. Clearances are measured from the furthest projecting face of all opposing base cabinets, counter tops, appliances, or walls, excluding hardware. ■

***11B*-804.2.1 Pass through kitchen.** In pass through kitchens where counters, appliances or cabinets are on two opposing sides, or where counters, appliances or cabinets are opposite a parallel wall, clearance between all opposing base cabinets, counter tops, appliances, or walls within kitchen work areas shall be 40 inches (*1016* mm) minimum. Pass through kitchens shall have two entries.

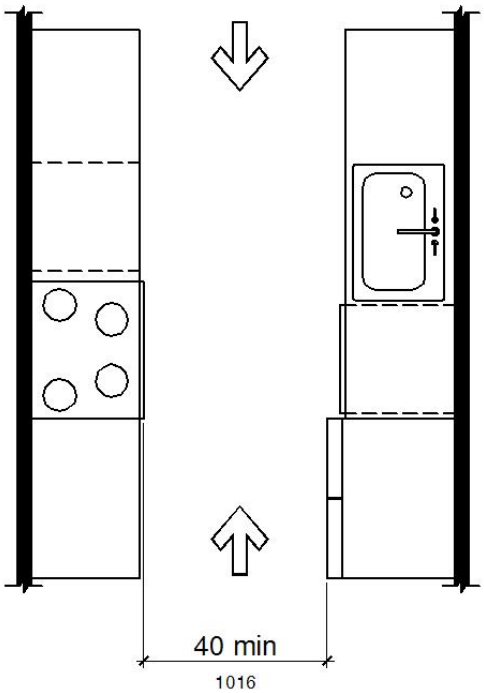

Figure *11B*-804.2.1

Pass Through Kitchens

***11B*-804.2.2 U-shaped.** In U-shaped kitchens enclosed on three contiguous sides, clearance between all opposing base cabinets, counter tops, appliances, or walls within kitchen work areas shall be 60 inches (*1524* mm) minimum.

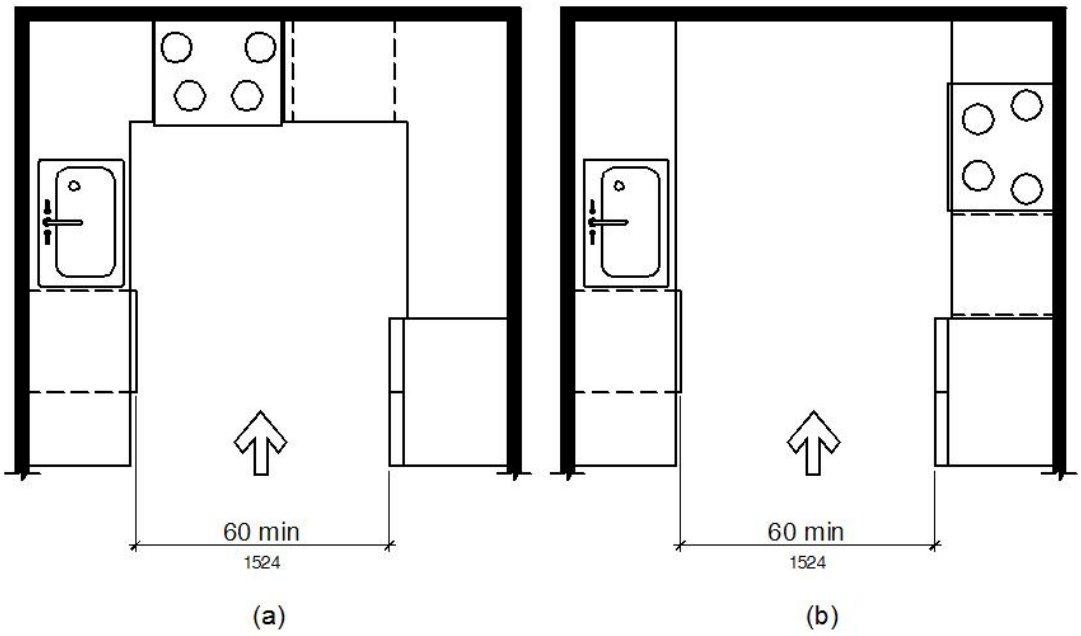

Figure *11B*-804.2.2
U-Shaped Kitchens

***11B*-804.3 Kitchen work surface.** In residential dwelling units required to comply with *Section 11B*-809, at least one 30 inches (*762* mm) wide minimum section of counter shall provide a kitchen work surface that complies with *Section 11B*-804.3.

***11B*-804.3.1 Clear floor or ground space.** A clear floor space complying with *Section 11B*-305 positioned for a forward approach shall be provided. The clear floor or ground space shall be centered on the kitchen work surface and shall provide knee and toe clearance complying with *Section 11B*-306.

Exception: Cabinetry shall be permitted under the kitchen work surface provided that all of the following conditions are met:

(a) the cabinetry can be removed without removal or replacement of the kitchen work surface;

(b) the finish floor extends under the cabinetry; and

(c) the walls behind and surrounding the cabinetry are finished.

***11B*-804.3.2 Height.** The kitchen work surface shall be 34 inches (*864* mm) maximum above the finish floor or ground.

Exception: A counter that is adjustable to provide a kitchen work surface at variable heights, 29 inches (*737* mm) minimum and 36 inches (*914* mm) maximum, shall be permitted.

***11B*-804.3.3 Exposed surfaces.** There shall be no sharp or abrasive surfaces under the work surface counters.

***11B*-804.4 Sinks.** Sinks shall comply with *Section 11B*-606.

***11B*-804.5 Storage.** At least 50 percent of shelf space in storage facilities shall comply with *Section 11B*-811.

***11B*-804.6 Appliances.** Where provided, kitchen appliances shall comply with *Section 11B*-804.6.

***11B*-804.6.1 Clear floor or ground space.** A clear floor or ground space complying with *Section 11B*-305 shall be provided at each kitchen appliance. Clear floor or ground spaces shall be permitted to overlap.

***11B*-804.6.2 Operable parts.** All appliance controls shall comply with *Section 11B*-309.

Exceptions:

1. Appliance doors and door latching devices shall not be required to comply with *Section 11B*-309.4.

2. Bottom-hinged appliance doors, when in the open position, shall not be required to comply with *Section 11B*-309.3.

***11B*-804.6.3 Dishwasher.** Clear floor or ground space shall be positioned adjacent to the dishwasher door. The dishwasher door, in the open position, shall not obstruct the clear floor or ground space for the dishwasher or the sink.

***11B*-804.6.4 Range or cooktop.** Where a forward approach is provided, the clear floor or ground space shall provide knee and toe clearance complying with *Section 11B*-306. Where knee and toe space is provided, the underside of the range or cooktop shall be insulated or otherwise configured to prevent burns, abrasions, or electrical shock. The location of controls shall not require reaching across burners.

***11B*-804.6.5 Oven.** Ovens shall comply with *Section 11B*-804.6.5.

***11B*-804.6.5.1 Side-hinged door ovens.** Side-hinged door ovens shall have the work surface required by *Section 11B*-804.3 positioned adjacent to the latch side of the oven door.

***11B*-804.6.5.2 Bottom-hinged door ovens.** Bottom-hinged door ovens shall have the work surface required by *Section 11B*-804.3 positioned adjacent to one side of the door.

***11B*-804.6.5.3 Controls.** Ovens shall have controls on front panels.

***11B*-804.6.6 Refrigerator/freezer.** Combination refrigerators and freezers shall have at least 50 percent of the freezer space 54 inches (*1372* mm) maximum above the finish floor or ground. The clear floor or ground space shall be positioned for a parallel approach to the space dedicated to a refrigerator/freezer with the centerline of the clear floor or ground space offset 24 inches (610 mm) maximum from the centerline of the dedicated space.

***11B*-805 Medical care and long-term care facilities**

11B-805.1 General. *Medical care facilities and long-term care facilities shall comply with Section 11B-805. All common use spaces and public use spaces in medical care facilities and long-term care facilities shall comply with this chapter.*

11B-805.2 Patient bedrooms and resident sleeping rooms. *Patient bedrooms and resident sleeping rooms required to provide mobility features shall comply with Section 11B-805.2.*

11B-805.2.1 Hand washing fixtures. *Hand washing fixtures shall comply with Section 11B-606.*

11B-805.2.2 Beds. *A 36 inch (914 mm) minimum wide clear space shall be provided along the full length of each side of the beds.*

11B-805.2.3 Turning space. *Turning space complying with Section 11B-304 shall be provided within the room.*

11B-805.2.4 Toilet and bathing rooms. *Toilet and bathing rooms that are provided as part of patient bedrooms and resident sleeping rooms complying with Section 11B-223.2 or 11B-223.3 shall comply with Section 11B-603. Where provided, one water closet, one lavatory, and one bathtub or shower shall comply with the applicable requirements of Sections 11B-603 through 11B-610.*

11B-805.3 Waiting rooms. *Waiting rooms shall comply with Section 11B-805.3.*

11B-805.3.1 Wheelchair spaces. *Where seating is provided in waiting rooms, at least 5 percent of the seating shall be wheelchair spaces complying with Section 11B-802.1.*

Exception: *In waiting rooms serving facilities specializing in treating conditions that affect mobility, 10 percent of the seating shall be wheelchair spaces complying with Section 11B-802.1.*

11B-805.4 Examination, diagnostic and treatment rooms. *Examination, diagnostic and treatment rooms shall comply with Section 11B-805.4.*

11B-805.4.1 Beds, exam tables, procedure tables, gurneys and lounge chairs. *A 36 inch (914 mm) minimum wide clear space shall be provided along the full length of each side of beds, exam tables, procedure tables, gurneys and lounge chairs.*

Exception: *General exam rooms in non-emergency settings may provide clear space on only one side of beds, gurneys and exam tables.*

11B-805.4.2 Equipment. *Clear space complying with Section 11B-305.2 shall be provided as required for specific equipment.*

11B-805.4.3 Turning space. *Turning space complying with Section 11B-304 shall be provided within the room.*

11B-805.5 Patient change areas. *Areas where patients change or are prepared for a procedure shall comply with Section 11B-222.*

11B-805.6 Hand washing fixtures, lavatories and sinks. *All hand washing fixtures, lavatories and sinks shall comply with Section 11B-606.*

Exception: *Scrub sinks, as defined in California Plumbing Code Section 221.0, shall not be required to comply with Section 11B-606.*

11B-805.7 Built-in cabinets and work surfaces. *Built-in cabinets, counters and work surfaces shall be accessible, including: patient wardrobes, nurse's stations, administrative centers, reception desks, medicine preparation areas, laboratory work stations, equipment consoles, clean and soiled utility cabinets, and storage areas; and shall comply with Sections 11B-225 and 11B-902.*

Exceptions:

1. *Built-in wardrobes in patient bedrooms and resident sleeping rooms not required to be accessible are not required to comply with the provisions of this chapter.*

2. *Clinical laboratory work stations provided in a laboratory area that are in addition to the minimum number required to be accessible (5 percent of the work stations provided, but no fewer than one), are not required to comply with the provisions of Section 11B-902.*

***11B*-806 Transient lodging guest rooms**

***11B*-806.1 General.** Transient lodging guest rooms shall comply with *Section 11B*-806. Guest rooms required to provide mobility features shall comply with *Section 11B*-806.2. Guest rooms required to provide communication features shall comply with *Section 11B*-806.3.

***11B*-806.2 Guest rooms with mobility features.** Guest rooms required to provide mobility features shall comply with *Section 11B*-806.2.

> USDOJ
>
> **Advisory 11B-806.2 Guest rooms with mobility features.** The requirements in Section 11B-806.2 do not include requirements that are common to all accessible spaces. For example, closets in guest rooms must comply with the applicable provisions for storage specified in scoping. ■

***11B*-806.2.1 Living and dining areas.** Living and dining areas shall be accessible.

***11B*-806.2.2 Exterior spaces.** Exterior spaces, including patios, terraces and balconies, that serve the guest room shall be accessible.

***11B*-806.2.3 Sleeping areas.** At least one sleeping area shall provide a *36 inch (914 mm) by 48 inch (1219 mm) minimum* clear space on both sides of a bed. The clear space shall be positioned for parallel approach to the side of the bed.

> **Exception:** Where a single clear floor space complying with *Section 11B*-305 positioned for parallel approach is provided between two beds, a clear floor or ground space shall not be required on both sides of a bed.

11B-806.2.3.1 Personal lift device floor space. *There shall be a clear space under the bed for the use of a personal lift device. The clear space shall extend under the bed parallel to the long side and be adjacent to an accessible route. The clear space shall extend to points horizontally 30 inches (762 mm), vertically 7 inches (178 mm) and not more than 12 inches (305 mm) from the head and foot end of the bed.*

***11B*-806.2.4 Toilet and bathing facilities.** At least one bathroom that is provided as part of a guest room shall comply with *Section 11B*-603. No fewer than one water closet, one lavatory, and one bathtub or shower shall comply with applicable requirements of *Sections 11B*-603 through *11B*-610. In addition, required roll-in shower compartments shall comply with *Section 11B*-608.2.2 or *11B*-608.2.3. Toilet and bathing fixtures required to comply with *Sections 11B*-603 through *11B*-610 shall be permitted to be located in more than one toilet or bathing area, provided that travel between fixtures does not require travel between other parts of the guest room.

> ***11B*-806.2.4.1 Vanity counter top space.** If vanity counter top space is provided in non-accessible guest toilet or bathing rooms, comparable vanity counter top space, in terms of size and proximity to the lavatory, shall also be provided in accessible guest toilet or bathing rooms.

> USDOJ
>
> **Advisory 11B-806.2.4.1 Vanity counter top space.** This provision is intended to ensure that accessible guest rooms are provided with comparable vanity counter top space. ■

***11B*-806.2.5 Kitchens, kitchenettes *and wet bars*.** Kitchens, kitchenettes *and wet bars* shall comply with *Section 11B*-804.

***11B*-806.2.6 Turning space.** Turning space complying with *Section 11B*-304 shall be provided within the guest room.

***11B*-806.3 Guest rooms with communication features.** Guest rooms required to provide communication features shall comply with *Section 11B*-806.3.

USDOJ

Advisory 11B-806.3 Guest rooms with communication features. In guest rooms required to have accessible communication features, consider ensuring compatibility with adaptive equipment used by people with hearing impairments. To ensure communication within the facility, as well as on commercial lines, provide telephone interface jacks that are compatible with both digital and analog signal use. If an audio headphone jack is provided on a speaker phone, a cutoff switch can be included in the jack so that insertion of the jack cuts off the speaker. If a telephone-like handset is used, the external speakers can be turned off when the handset is removed from the cradle. For headset or external amplification system compatibility, a standard subminiature jack installed in the telephone will provide the most flexibility. ■

***11B*-806.3.1 Alarms.** Where emergency warning systems are provided, *fire* alarms *shall comply* with *Section 11B*-702 *and carbon monoxide alarms shall comply with Chapter 4.*

***11B*-806.3.2 Notification devices.** Visible notification devices shall be provided to alert room occupants of incoming telephone calls and a door knock or bell. Notification devices shall not be connected to visible alarm signal appliances. Telephones shall have volume controls compatible with the telephone system and shall comply with *Section 11B*-704.3. Telephones shall be served by an electrical outlet complying with *Section 11B*-309 located within 48 inches (*1219* mm) of the telephone to facilitate the use of a TTY.

***11B*-807 Holding cells and housing cells**

***11B*-807.1 General.** Holding cells and housing cells shall comply with *Section 11B*-807.

***11B*-807.2 Cells with mobility features.** Cells required to provide mobility features shall comply with *Section 11B*-807.2.

***11B*-807.2.1 Turning space.** Turning space complying with *Section 11B*-304 shall be provided within the cell.

***11B*-807.2.2 Benches.** Where benches are provided, at least one bench shall comply with *Section 11B*-903.

***11B*-807.2.3 Beds.** Where beds are provided, clear floor space complying with *Section 11B*-305 shall be provided on at least one side of the bed. The clear floor space shall be positioned for parallel approach to the side of the bed.

***11B*-807.2.4 Toilet and bathing facilities.** Toilet facilities or bathing facilities that are provided as part of a cell shall comply with *Section 11B*-603. Where provided, no fewer than one water closet, one lavatory, and one bathtub or shower shall comply with the applicable requirements of *Sections 11B*-603 through *11B*-610.

USDOJ

Advisory 11B-807.2.4 Toilet and bathing facilities. In holding cells, housing cells, or rooms required to be accessible, these requirements do not require a separate toilet room. ■

***11B*-807.3 Cells with communication features.** Cells required to provide communication features shall comply with *Section 11B*-807.3.

***11B*-807.3.1 Alarms.** Where audible emergency alarm systems are provided to serve the occupants of cells, visible alarms complying with *Section 11B*-702 shall be provided.

Exception: Visible alarms shall not be required where inmates or detainees are not allowed independent means of egress.

***11B*-807.3.2 Telephones.** Telephones, where provided within cells, shall have volume controls complying with *Section 11B*-704.3.

***11B*-808 Courtrooms**

***11B*-808.1 General.** Courtrooms shall comply with *Section 11B*-808.

***11B*-808.2 Turning space.** Where provided, areas that are raised or depressed and accessed by ramps or platform lifts with entry ramps shall provide unobstructed turning space complying with *Section 11B*-304.

***11B*-808.3 Clear floor space.** Each jury box and witness stand shall have, within its defined area, clear floor space complying with *Section 11B*-305.

Exception: In alterations, wheelchair spaces are not required to be located within the defined area of raised jury boxes or witness stands and shall be permitted to be located outside these spaces where ramp or platform lift access poses a hazard by restricting or projecting into a means of egress required by the appropriate administrative authority.

***11B*-808.4 Judges' benches and courtroom stations.** Judges' benches, clerks' stations, bailiffs' stations, deputy clerks' stations, court reporters' stations and litigants' and counsel stations shall comply with *Section 11B*-902.

***11B*-809 Residential dwelling units**

***11B*-809.1 General.** *When located within public housing facilities, residential* dwelling units shall comply with *Section 11B*-809. Residential dwelling units required to provide mobility features shall comply with *Sections 11B*-809.2 through *11B*-809.4. Residential dwelling units required to provide communication features shall comply with *Section 11B*-809.5.

***11B*-809.2 Accessible routes.** Accessible routes complying with *Division* 4 shall be provided within residential dwelling units in accordance with *Section 11B*-809.2.

Exception: Accessible routes shall not be required to or within unfinished attics or unfinished basements.

***11B*-809.2.1 Location.** At least one accessible route shall connect all spaces and elements which are a part of the residential dwelling unit. Where only one accessible route is provided, it shall not pass through bathrooms, closets, or similar spaces.

***11B*-809.2.2 Turning space.** All rooms served by an accessible route shall provide a turning space complying with *Section 11B*-304.

Exception: Turning space shall not be required in exterior spaces 30 inches (*762* mm) maximum in depth or width.

USDOJ

Advisory 11B-809.2.2 Turning space. It is generally acceptable to use required clearances to provide wheelchair turning space. For example, in kitchens, Section 11B-804.3.1 requires at least one work surface with clear floor space complying with Section 11B-306 to be centered beneath. If designers elect to provide clear floor space that is at least 36 inches (915 mm) wide, as opposed to the required 30 inches (760 mm) wide, that clearance can be part of a T-turn, thereby maximizing efficient use of the kitchen area. However, the overlap of turning space must be limited to one segment of the T-turn so that back-up maneuvering is not restricted. It would, therefore, be unacceptable to use both the clearances under the work surface and the sink as part of a T-turn. See Section 11B-304.3.2 regarding T-turns. ■

***11B*-809.3 Kitchen.** Where a kitchen is provided, it shall comply with *Section 11B*-804.

***11B*-809.4 Toilet facilities and bathing facilities.** At least one bathroom shall comply with *Section 11B*-603. No fewer than one of each type of fixture provided *within the bathroom* shall comply with applicable requirements of *Sections 11B*-603 through *11B*-610. Toilet and bathing fixtures required to comply with *Sections 11B*-603 through *11B*-610 shall be located in the same *bathroom or* toilet and bathing area, such that travel between fixtures does not require travel between other parts of the residential dwelling unit.

USDOJ

Advisory 11B-809.4 Toilet facilities and bathing facilities. In an effort to promote space efficiency, vanity counter top space in accessible residential dwelling units is often omitted. This omission does not promote equal access or equal enjoyment of the unit. Where comparable units have vanity counter tops, accessible units should also have vanity counter tops located as close as possible to the lavatory for convenient access to toiletries. ■

11B-809.4.1 Subsequent bathrooms. *In residential dwelling units with more than one bathroom, when a bathtub is installed in the first bathroom in compliance with Section 11B-809.4 and a shower compartment is provided in a subsequent bathroom, at least one shower compartment shall comply with Section 11B-608.*

***11B*-809.5 Residential dwelling units with communication features.** Residential dwelling units required to provide communication features shall comply with *Section 11B*-809.5.

***11B*-809.5.1 Building fire alarm system.** Where a building fire alarm system is provided, the system wiring shall be extended to a point within the residential dwelling unit in the vicinity of the residential dwelling unit smoke detection system.

***11B*-809.5.1.1 Alarm appliances.** Where alarm appliances are provided within a residential dwelling unit as part of the building fire alarm system, they shall comply with *Chapter 9, Section 907.5.2.3.4*.

***11B*-809.5.1.2 Activation.** All visible alarm appliances provided within the residential dwelling unit for building fire alarm notification shall be activated upon activation of the building fire alarm in the portion of the building containing the residential dwelling unit.

***11B*-809.5.2 Residential dwelling unit smoke detection system *and carbon monoxide detection system*.** Residential dwelling unit smoke detection systems shall comply with *Chapter 9, Section 907.2.11*. *Residential dwelling unit carbon monoxide detection systems shall comply with Chapter 4.*

***11B*-809.5.2.1 Activation.** All visible alarm appliances provided within the residential dwelling unit for smoke detection notification shall be activated upon smoke detection. *All visible alarm*

appliances provided within the residential dwelling unit for carbon monoxide detection notification shall be activated upon carbon monoxide detection.

***11B*-809.5.3 Interconnection.** The same visible alarm appliances shall be permitted to provide notification of residential dwelling unit smoke detection, building fire alarm activation, *and carbon monoxide detection*.

***11B*-809.5.4 Prohibited use.** Visible alarm appliances used to indicate residential dwelling unit smoke detection, *carbon monoxide detection,* or building fire alarm activation shall not be used for any other purpose within the residential dwelling unit.

***11B*-809.5.5 Residential dwelling unit primary entrance.** Communication features shall be provided at the residential dwelling unit primary entrance complying with *Section 11B*-809.5.5.

***11B*-809.5.5.1 Notification.** A hard-wired electric doorbell shall be provided. A button or switch shall be provided outside the residential dwelling unit primary entrance. Activation of the button or switch shall initiate an audible tone and visible signal within the residential dwelling unit. Where visible doorbell signals are located in sleeping areas, they shall have controls to deactivate the signal.

***11B*-809.5.5.2 Identification.** A means for visually identifying a visitor without opening the residential dwelling unit entry door shall be provided and shall allow for a minimum 180 degree range of view.

USDOJ

Advisory 11B-809.5.5.2 Identification. In doors, peepholes that include prisms clarify the image and should offer a wide-angle view of the hallway or exterior for both standing persons and wheelchair users. Such peepholes can be placed at a standard height and permit a view from several feet from the door. ■

***11B*-809.5.6 Site, building, or floor entrance.** Where a system, including a closed-circuit system, permitting voice communication between a visitor and the occupant of the residential dwelling unit is provided, the system shall comply with *Section 11B*-708.4.

***11B*-810 Transportation facilities**

***11B*-810.1 General.** Transportation facilities shall comply with *Section 11B*-810.

11B-810.1.1 Vehicle boarding. *Stations shall not be designed or constructed so as to require persons with disabilities to board or alight from a vehicle at a location other than one used by the general public.*

11B-810.1.2 Baggage systems. *Baggage check-in and retrieval systems shall be on an accessible route complying with Section 11B-402 and shall have space immediately adjacent complying with Section 11B-302.*

***11B*-810.2 Bus boarding and alighting areas.** Bus boarding and alighting areas shall comply with *Section 11B*-810.2.

USDOJ

Advisory 11B-810.2 Bus boarding and alighting areas. At bus stops where a shelter is provided, the bus stop pad can be located either within or outside of the shelter. ■

***11B*-810.2.1 Surface.** Bus stop boarding and alighting areas shall have a firm, stable surface.

***11B*-810.2.2 Dimensions.** Bus stop boarding and alighting areas shall provide a clear length of 96 inches (*2438* mm) minimum, measured perpendicular to the curb or vehicle roadway edge, and a clear width of 60 inches (*1524* mm) minimum, measured parallel to the vehicle roadway.

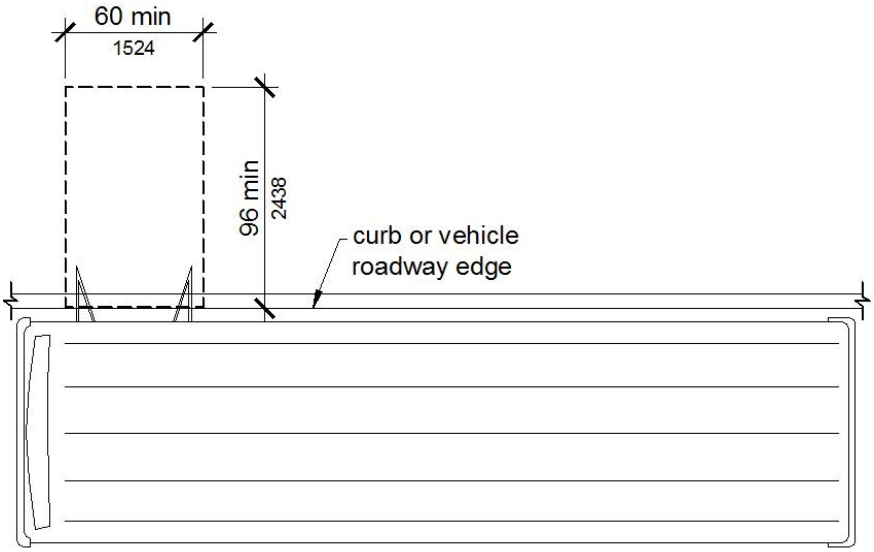

Figure *11B*-810.2.2
Dimensions of Bus Boarding and Alighting Areas

***11B*-810.2.3 Connection.** Bus stop boarding and alighting areas shall be connected to streets, sidewalks, or pedestrian paths by an accessible route complying with *Section 11B*-402. *Newly constructed bus stop boarding and alighting areas shall provide a detectable transition between the boarding/alighting area and the roadway; the detectable transition shall consist of a curb with the face sloped at 35 degrees maximum from vertical or detectable warnings complying with Sections 11B-705.1.1 and 11B-705.1.2.4.*

***11B*-810.2.4 Slope.** Parallel to the roadway, the slope of the bus stop boarding and alighting area shall be the same as the roadway, to the maximum extent practicable. Perpendicular to the roadway, the slope of the bus stop boarding and alighting area shall not be steeper than 1:48.

***11B*-810.3 Bus shelters.** Bus shelters shall provide a minimum clear floor or ground space complying with *Section 11B*-305 entirely within the shelter. Bus shelters shall be connected by an accessible route complying with *Section 11B*-402 to a boarding and alighting area complying with *Section 11B*-810.2.

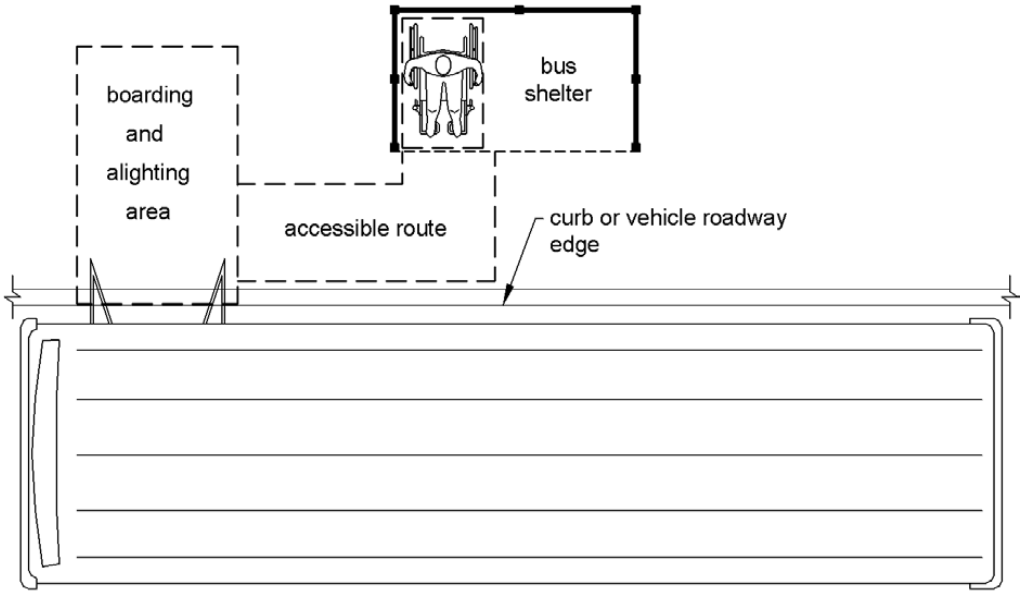

Figure *11B*-810.3
Bus Shelters

***11B*-810.4 Bus signs.** Bus route identification signs shall comply with *Sections 11B*-703.5.1 through *11B*-703.5.4, and *Sections 11B*-703.5.7 and *11B*-703.5.8. In addition, to the maximum extent practicable, bus route identification signs shall comply with *Section 11B*-703.5.5.

Exception: Bus schedules, timetables and maps that are posted at the bus stop or bus bay shall not be required to comply.

***11B*-810.5 Rail platforms.** Rail platforms shall comply with *Section 11B*-810.5.

***11B*-810.5.1 Slope.** Rail platforms shall not exceed a slope of 1:48 in all directions.

Exception: Where platforms serve vehicles operating on existing track or track laid in existing roadway, the slope of the platform parallel to the track shall be permitted to be equal to the slope (grade) of the roadway or existing track.

***11B*-810.5.2 Detectable warnings.** Platform boarding edges not protected by platform screens or guards shall have detectable warnings complying with *Section 11B*-705 along the full length of the public use area of the platform.

***11B*-810.5.3 Platform and vehicle floor coordination.** Station platforms shall be positioned to coordinate with vehicles in accordance with the applicable requirements of 36 CFR Part 1192. Low-level platforms shall be 8 inches (*203* mm) minimum above top of rail.

Exception: Where vehicles are boarded from sidewalks or street-level, low-level platforms shall be permitted to be less than 8 inches (*203* mm).

USDOJ

Advisory 11B-810.5.3 Platform and vehicle floor coordination. The height and position of a platform must be coordinated with the floor of the vehicles it serves to minimize the vertical and horizontal gaps, in accordance with the ADA Accessibility Guidelines for Transportation Vehicles (36 CFR Part 1192). The vehicle guidelines, divided by bus, van, light rail, rapid rail, commuter rail, intercity rail, are available at www.access-board.gov. The preferred

alignment is a high platform, level with the vehicle floor. In some cases, the vehicle guidelines permit use of a low platform in conjunction with a lift or ramp. Most such low platforms must have a minimum height of eight inches above the top of the rail. Some vehicles are designed to be boarded from a street or the sidewalk along the street and the exception permits such boarding areas to be less than eight inches high. ■

***11B*-810.6 Rail station signs.** Rail station signs shall comply with *Section 11B*-810.6.

Exception. Signs shall not be required to comply with *Sections 11B*-810.6.1 and *11B*-810.6.2 where audible signs are remotely transmitted to hand-held receivers, or are user- or proximity-actuated.

USDOJ

Advisory 11B-810.6 Rail station signs Exception. Emerging technologies such as an audible sign systems using infrared transmitters and receivers may provide greater accessibility in the transit environment than traditional Braille and raised letter signs. The transmitters are placed on or next to print signs and transmit their information to an infrared receiver that is held by a person. By scanning an area, the person will hear the sign. This means that signs can be placed well out of reach of Braille readers, even on parapet walls and on walls beyond barriers. Additionally, such signs can be used to provide wayfinding information that cannot be efficiently conveyed on Braille signs. ■

***11B*-810.6.1 Entrances.** Where signs identify a station or its entrance, at least one sign at each entrance shall comply with *Section 11B*-703.2 and shall be placed in uniform locations to the maximum extent practicable. Where signs identify a station that has no defined entrance, at least one sign shall comply with *Section 11B*-703.2 and shall be placed in a central location.

***11B*-810.6.2 Routes and destinations.** Lists of stations, routes and destinations served by the station which are located on boarding areas, platforms, or mezzanines shall comply with *Section 11B*-703.5. At least one tactile sign identifying the specific station and complying with *Section 11B*-703.2 shall be provided on each platform or boarding area. Signs covered by this requirement shall, to the maximum extent practicable, be placed in uniform locations within the system.

Exception: Where sign space is limited, characters shall not be required to exceed 3 inches (*76* mm).

USDOJ

Advisory 11B-810.6.2 Routes and destinations. Route maps are not required to comply with the informational sign requirements in this chapter. ■

***11B*-810.6.3 Station names**. Stations covered by this section shall have identification signs complying with *Section 11B*-703.5. Signs shall be clearly visible and within the sight lines of standing and sitting passengers from within the vehicle on both sides when not obstructed by another vehicle.

USDOJ

Advisory 11B-810.6.3 Station names. It is also important to place signs at intervals in the station where passengers in the vehicle will be able to see a sign when the vehicle is either stopped at the station or about to come to a stop in the station. The number of signs necessary may be directly related to the size of the lettering displayed on the sign. ■

***11B*-810.7 Public address systems.** Where public address systems convey audible information to the public, the same or equivalent information shall be provided in a visual format.

***11B*-810.8 Clocks.** Where clocks are provided for use by the public, the clock face shall be uncluttered so that its elements are clearly visible. Hands, numerals and digits shall contrast with the background either light-on-dark or dark-on-light. Where clocks are installed overhead, numerals and digits shall comply with *Section 11B*-703.5.

***11B*-810.9 Escalators.** Where provided, escalators shall comply with Sections 6.1.3.5.6 and 6.1.3.6.5 of ASME A17.1 and shall have a clear width of 32 inches (*813* mm) minimum.

Exception: Existing escalators in key stations shall not be required to comply with *Section 11B*-810.9.

***11B*-810.10 Track crossings.** Where a circulation path serving boarding platforms crosses tracks, it shall comply with *Section 11B*-402.

Exception: Openings for wheel flanges shall be permitted to be 2½ inches (64 mm) maximum.

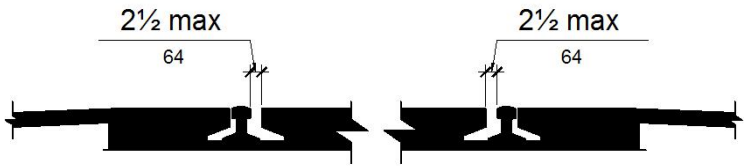

Figure *11B*-810.10 (Exception)
Track Crossings

***11B*-811 Storage**

***11B*-811.1 General.** Storage shall comply with *Section 11B*-811.

***11B*-811.2 Clear floor or ground space.** A clear floor or ground space complying with *Section 11B*-305 shall be provided.

***11B*-811.3 Height.** Storage elements shall comply with at least one of the reach ranges specified in *Section 11B*-308.

***11B*-811.4 Operable parts.** Operable parts shall comply with *Section 11B*-309.

***11B*-901 General**

***11B*-901.1 Scope.** The provisions of *Division* 9 shall apply where required by *Division* 2 or where referenced by a requirement in this *chapter*.

***11B*-902 Dining surfaces and work surfaces**

***11B*-902.1 General.** Dining surfaces and work surfaces shall comply with *Sections 11B*-902.2 and *11B*-902.3.

Exception: Dining surfaces and work surfaces for children's use shall be permitted to comply with *Section 11B*-902.4.

USDOJ

Advisory 11B-902.1 General. Dining surfaces include, but are not limited to, bars, tables, lunch counters, and booths. Examples of work surfaces include writing surfaces, study carrels, student laboratory stations, baby changing and other tables or fixtures for personal grooming, coupon counters, and where covered by the ABA scoping provisions, employee work stations. ■

***11B*-902.2 Clear floor or ground space.** A clear floor space complying with *Section 11B*-305 positioned for a forward approach shall be provided. Knee and toe clearance complying with *Section 11B*-306 shall be provided.

***11B*-902.3 Height.** The tops of dining surfaces and work surfaces shall be 28 inches (*711* mm) minimum and 34 inches (*864* mm) maximum above the finish floor or ground.

***11B*-902.4 Dining surfaces and work surfaces for children's use.** Accessible dining surfaces and work surfaces for children's use shall comply with *Section 11B*-902.4.

Exception: Dining surfaces and work surfaces that are used primarily by children 5 years and younger shall not be required to comply with *Section 11B*-902.4 where a clear floor or ground space complying with *Section 11B*-305 positioned for a parallel approach is provided.

***11B*-902.4.1 Clear floor or ground space.** A clear floor space complying with *Section 11B*-305 positioned for forward approach shall be provided. Knee and toe clearance complying with *Section 11B*-306 shall be provided, except that knee clearance 24 inches (610 mm) minimum above the finish floor or ground shall be permitted.

***11B*-902.4.2 Height.** The tops of tables and counters shall be 26 inches (660 mm) minimum and 30 inches (*762* mm) maximum above the finish floor or ground.

***11B*-903 Benches**

***11B*-903.1 General.** Benches shall comply with *Section 11B*-903.

***11B*-903.2 Clear floor or ground space.** Clear floor or ground space complying with *Section 11B*-305 shall be provided and shall be positioned at the end of the bench seat and parallel to the short axis of the bench.

***11B*-903.3 Size.** Benches shall have seats that are *48* inches (*1219* mm) long minimum and 20 inches (*508* mm) deep minimum and 24 inches (610 mm) deep maximum.

***11B*-903.4 Back support.** The bench shall provide for back support or shall be affixed to a wall *along its long dimension*. Back support shall be *48* inches (*1219* mm) long minimum and shall extend from a point 2 inches (51 mm) maximum above the seat surface to a point 18 inches (*457* mm) minimum above the seat surface. Back support shall be 2½ inches (64 mm) maximum from the rear edge of the seat measured horizontally.

USDOJ

Advisory 11B-903.4 Back support. To assist in transferring to the bench, consider providing grab bars on a wall adjacent to the bench, but not on the seat back. If provided, grab bars cannot obstruct transfer to the bench. ■

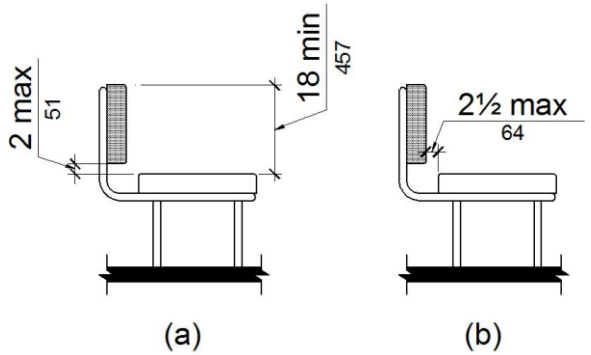

Figure *11B*-903.4
Bench Back Support

***11B*-903.5 Height.** The top of the bench seat surface shall be 17 inches (*432* mm) minimum and 19 inches (*483* mm) maximum above the finish floor or ground.

***11B*-903.6 Structural strength.** *Benches shall be affixed to the wall or floor.* Allowable stresses shall not be exceeded for materials used when a vertical or horizontal force of 250 pounds (1112 N) is applied at any point on the seat, fastener, mounting device, or supporting structure.

***11B*-903.7 Wet locations.** Where installed in wet locations, the surface of the seat shall be slip resistant and shall not accumulate water.

***11B*-904 Check-out aisles and sales and service counters**

***11B*-904.1 General.** Check-out aisles and sales and service counters shall comply with the applicable requirements of *Section 11B*-904.

***11B*-904.2 Approach.** All portions of counters required to comply with *Section 11B*-904 shall be located adjacent to a walking surface complying with *Section 11B*-403.

USDOJ

Advisory 11B-904.2 Approach. If a cash register is provided at the sales or service counter, locate the accessible counter close to the cash register so that a person using a wheelchair is visible to sales or service personnel and to minimize the reach for a person with a disability. ■

***11B*-904.3 Check-out aisles.** Check-out aisles shall comply with *Section 11B*-904.3.

***11B*-904.3.1 Aisle.** Aisles shall comply with *Section 11B*-403.

***11B*-904.3.2 Counter.** The counter surface height shall be 38 inches (965 mm) maximum above the finish floor or ground. The top of the counter edge protection shall be 2 inches (51 mm) maximum above the top of the counter surface on the aisle side of the check-out counter.

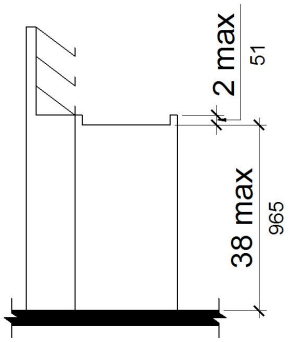

Figure *11B*-904.3.2
Check-Out Aisle Counters

***11B*-904.3.3 Check writing surfaces.** Where provided, check writing surfaces shall comply with *Section 11B*-902.3.

11B-904.3.4 Identification sign. *When not all check-out aisles are accessible, accessible check-out aisles shall be identified by a sign clearly visible to a person in a wheelchair displaying the International Symbol of Accessibility complying with Section 11B-703.7.2.1. The sign shall be a minimum of 4 inches by 4 inches (102 mm by 102 mm).*

***11B*-904.4 Sales and service counters.** Sales counters and service counters shall comply with *Section 11B*-904.4.1 or *11B*-904.4.2. The accessible portion of the counter top shall extend the same depth as the sales or service counter top.

Exception: In alterations, when the provision of a counter complying with *Section 11B*-904.4 would result in a reduction of the number of existing counters at work stations or a reduction of the number of existing mail boxes, the counter shall be permitted to have a portion which is 24 inches (610 mm) long minimum complying with *Section 11B*-904.4.1 provided that the required clear floor or ground space is centered on the accessible length of the counter.

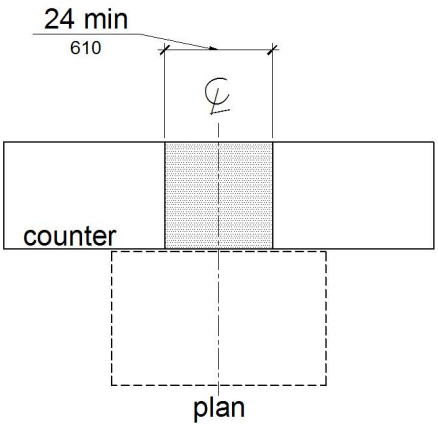

Figure *11B*-904.4 (Exception)
Alteration of Sales and Service Counters

***11B*-904.4.1 Parallel approach.** A portion of the counter surface that is 36 inches (*914* mm) long minimum and *34* inches (*864* mm) high maximum above the finish floor shall be provided. A clear floor or ground space complying with *Section 11B*-305 shall be positioned for a parallel approach adjacent to the 36 inch (*914* mm) minimum length of counter.

Exception: Where the provided counter surface is less than 36 inches (*914* mm) long, the entire counter surface shall be *34* inches (*864* mm) high maximum above the finish floor.

***11B*-904.4.2 Forward approach.** A portion of the counter surface that is *36* inches (*914* mm) long minimum and *34* inches (*864* mm) high maximum shall be provided. Knee and toe space complying with *Section 11B*-306 shall be provided under the counter. A clear floor or ground space complying with *Section 11B*-305 shall be positioned for a forward approach to the counter.

***11B*-904.5 Food service lines.** Counters in food service lines shall comply with *Section 11B*-904.5.

***11B*-904.5.1 Self-service shelves and dispensing devices.** Self-service shelves and dispensing devices for tableware, dishware, condiments, food and beverages shall comply with *Section 11B*-308.

***11B*-904.5.2 Tray slides.** The tops of tray slides shall be 28 inches (*711* mm) minimum and 34 inches (*864* mm) maximum above the finish floor or ground.

***11B*-904.6 Security glazing.** Where counters or teller windows have security glazing to separate personnel from the public, a method to facilitate voice communication shall be provided. Telephone handset devices, if provided, shall comply with *Section 11B*-704.3.

USDOJ

Advisory 904.6 Security glazing. Assistive listening devices complying with Section 11B-706 can facilitate voice communication at counters or teller windows where there is security glazing which promotes distortion in audible information. Where assistive listening devices are installed, place signs complying with Section 11B-703.7.2.4 to identify those facilities which are so equipped. Other voice communication methods include, but are not limited to, grilles, slats, talk-through baffles, intercoms, or telephone handset devices. ■

DIVISION 10: RECREATION FACILITIES

11B-1001 General

***11B*-1001.1 Scope.** The provisions of *Division* 10 shall apply where required by *Division* 2 or where referenced by a requirement in this *chapter*.

> USDOJ
>
> **Advisory 11B-1001.1 Scope.** Unless otherwise modified or specifically addressed in Division 10, all other ADAAG provisions apply to the design and construction of recreation facilities and elements. The provisions in Section 11B-1001.1 apply wherever these elements are provided. For example, office buildings may contain a room with exercise equipment to which these sections would apply. ■

11B-1002 Amusement rides

***11B*-1002.1 General.** Amusement rides shall comply with *Section 11B*-1002.

***11B*-1002.2 Accessible routes.** Accessible routes serving amusement rides shall comply with *Division* 4.

Exceptions:

1. In load or unload areas and on amusement rides, where compliance with *Section 11B*-405.2 is not structurally or operationally feasible, ramp slope shall be permitted to be 1:8 maximum.

2. In load or unload areas and on amusement rides, handrails provided along walking surfaces complying with *Section 11B*-403 and required on ramps complying with *Section 11B*-405 shall not be required to comply with *Section 11B*-505 where compliance is not structurally or operationally feasible.

> USDOJ
>
> **Advisory 11B-1002.2 Accessible routes Exception 1.** Steeper slopes are permitted on accessible routes connecting the amusement ride in the load and unload position where it is "structurally or operationally infeasible." In most cases, this will be limited to areas where the accessible route leads directly to the amusement ride and where there are space limitations on the ride, not the queue line. Where possible, the least possible slope should be used on the accessible route that serves the amusement ride. ■

***11B*-1002.3 Load and unload areas.** A turning space complying with *Sections 11B*-304.2 and *11B*-304.3 shall be provided in load and unload areas.

***11B*-1002.4 Wheelchair spaces in amusement rides.** Wheelchair spaces in amusement rides shall comply with *Section 11B*-1002.4.

***11B*-1002.4.1 Floor or ground surface.** The floor or ground surface of wheelchair spaces shall be stable and firm.

***11B*-1002.4.2 Slope.** The floor or ground surface of wheelchair spaces shall have a slope not steeper than 1:48 when in the load and unload position.

***11B*-1002.4.3 Gaps.** Floors of amusement rides with wheelchair spaces and floors of load and unload areas shall be coordinated so that, when amusement rides are at rest in the load and unload position, the vertical difference between the floors shall be within plus or minus 5/8 inches (*15.9* mm) and the horizontal gap shall be 3 inches (*76* mm) maximum under normal passenger load conditions.

Exception: Where compliance is not operationally or structurally feasible, ramps, bridge plates, or similar devices complying with the applicable requirements of 36 CFR 1192.83(c) shall be provided.

USDOJ

Advisory 11B-1002.4.3 Gaps Exception. 36 CFR 1192.83(c) ADA Accessibility Guidelines for Transportation Vehicles - Light Rail Vehicles and Systems - Mobility Aid Accessibility is available at **www.access-board.gov**. It includes provisions for bridge plates and ramps that can be used at gaps between wheelchair spaces and floors of load and unload areas. ■

***11B*-1002.4.4 Clearances.** Clearances for wheelchair spaces shall comply with *Section 11B*-1002.4.4.

Exceptions:

1. Where provided, securement devices shall be permitted to overlap required clearances.
2. Wheelchair spaces shall be permitted to be mechanically or manually repositioned.
3. Wheelchair spaces shall not be required to comply with *Section 11B*-307.4.

USDOJ

Advisory 11B-1002.4.4 Clearances Exception 3. This exception for protruding objects applies to the ride devices, not to circulation areas or accessible routes in the queue lines or the load and unload areas. ■

***11B*-1002.4.4.1 Width and length.** Wheelchair spaces shall provide a clear width of 30 inches (*762* mm) minimum and a clear length of 48 inches (*1219* mm) minimum measured to 9 inches (*229* mm) minimum above the floor surface.

***11B*-1002.4.4.2 Side entry.** Where wheelchair spaces are entered only from the side, amusement rides shall be designed to permit sufficient maneuvering clearance for individuals using a wheelchair or mobility aid to enter and exit the ride.

USDOJ

Advisory 11B-1002.4.4.2 Side entry. The amount of clear space needed within the ride, and the size and position of the opening are interrelated. A 32 inch (815 mm) clear opening will not provide sufficient width when entered through a turn into an amusement ride. Additional space for maneuvering and a wider door will be needed where a side opening is centered on the ride. For example, where a 42 inch (1065 mm) opening is provided, a minimum clear space of 60 inches (1525 mm) in length and 36 inches (915mm) in depth is needed to ensure adequate space for maneuvering. ■

***11B*-1002.4.4.3 Permitted protrusions in wheelchair spaces.** Objects are permitted to protrude a distance of 6 inches (*152* mm) maximum along the front of the wheelchair space, where located 9 inches (*229* mm) minimum and 27 inches (*686* mm) maximum above the floor or ground

surface of the wheelchair space. Objects are permitted to protrude a distance of 25 inches (635 mm) maximum along the front of the wheelchair space, where located more than 27 inches (*686* mm) above the floor or ground surface of the wheelchair space.

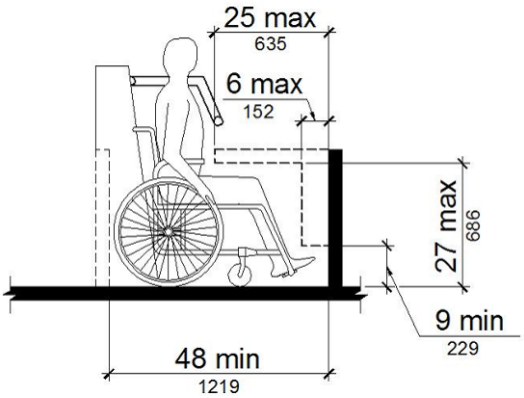

Figure *11B*-1002.4.4.3
Protrusions in Wheelchair Spaces in Amusement Rides

***11B*-1002.4.5 Ride entry.** Openings providing entry to wheelchair spaces on amusement rides shall be 32 inches (*813* mm) minimum clear.

***11B*-1002.4.6 Approach.** One side of the wheelchair space shall adjoin an accessible route when in the load and unload position.

***11B*-1002.4.7 Companion seats.** Where the interior width of the amusement ride is greater than 53 inches (*1346* mm), seating is provided for more than one rider, and the wheelchair is not required to be centered within the amusement ride, a companion seat shall be provided for each wheelchair space.

***11B*-1002.4.7.1 Shoulder-to-shoulder seating.** Where an amusement ride provides shoulder-to-shoulder seating, companion seats shall be shoulder-to-shoulder with the adjacent wheelchair space.

Exception: Where shoulder-to-shoulder companion seating is not operationally or structurally feasible, compliance with this requirement shall be required to the maximum extent practicable.

***11B*-1002.5 Amusement ride seats designed for transfer.** Amusement ride seats designed for transfer shall comply with *Section 11B*-1002.5 when positioned for loading and unloading.

USDOJ

Advisory 11B-1002.5 Amusement ride seats designed for transfer. The proximity of the clear floor or ground space next to an element and the height of the element one is transferring to are both critical for a safe and independent transfer. Providing additional clear floor or ground space both in front of and diagonal to the element will provide flexibility and will increase usability for a more diverse population of individuals with disabilities. Ride seats designed for transfer should involve only one transfer. Where possible, designers are encouraged to locate the ride seat no higher than 17 to 19 inches (430 to 485 mm) above the load and unload surface. Where greater distances are required for transfers, providing gripping surfaces, seat padding, and avoiding sharp objects in the path of transfer will facilitate the transfer. ■

***11B*-1002.5.1 Clear floor or ground space.** A clear floor or ground space complying with *Section 11B*-305 shall be provided in the load and unload area adjacent to the amusement ride seats designed for transfer.

***11B*-1002.5.2 Transfer height.** The height of amusement ride seats designed for transfer shall be 14 inches (*356* mm) minimum and 24 inches (610 mm) maximum measured from the surface of the load and unload area.

***11B*-1002.5.3 Transfer entry.** Where openings are provided for transfer to amusement ride seats, the openings shall provide clearance for transfer from a wheelchair or mobility aid to the amusement ride seat.

***11B*-1002.5.4 Wheelchair storage space.** Wheelchair storage spaces complying with *Section 11B*-305 shall be provided in or adjacent to unload areas for each required amusement ride seat designed for transfer and shall not overlap any required means of egress or accessible route.

***11B*-1002.6 Transfer devices for use with amusement rides.** Transfer devices for use with amusement rides shall comply with *Section 11B*-1002.6 when positioned for loading and unloading.

USDOJ

Advisory 11B-1002.6 Transfer devices for use with amusement rides. Transfer devices for use with amusement rides should permit individuals to make independent transfers to and from their wheelchairs or mobility devices. There are a variety of transfer devices available that could be adapted to provide access onto an amusement ride. Examples of devices that may provide for transfers include, but are not limited to, transfer systems, lifts, mechanized seats, and custom designed systems. Operators and designers have flexibility in developing designs that will facilitate individuals to transfer onto amusement rides. These systems or devices should be designed to be reliable and sturdy.

Designs that limit the number of transfers required from a wheelchair or mobility device to the ride seat are encouraged. When using a transfer device to access an amusement ride, the least number of transfers and the shortest distance is most usable. Where possible, designers are encouraged to locate the transfer device seat no higher than 17 to 19 inches (430 to 485 mm) above the load and unload surface. Where greater distances are required for transfers, providing gripping surfaces, seat padding, and avoiding sharp objects in the path of transfer will facilitate the transfer. Where a series of transfers are required to reach the amusement ride seat, each vertical transfer should not exceed 8 inches (205 mm). ■

***11B*-1002.6.1 Clear floor or ground space.** A clear floor or ground space complying with *Section 11B*-305 shall be provided in the load and unload area adjacent to the transfer device.

***11B*-1002.6.2 Transfer height.** The height of transfer device seats shall be 14 inches (*356* mm) minimum and 24 inches (610 mm) maximum measured from the load and unload surface.

***11B*-1002.6.3 Wheelchair storage space.** Wheelchair storage spaces complying with *Section 11B*-305 shall be provided in or adjacent to unload areas for each required transfer device and shall not overlap any required means of egress or accessible route.

***11B*-1003 Recreational boating facilities**

***11B*-1003.1 General.** Recreational boating facilities shall comply with *Section 11B*-1003.

***11B*-1003.2 Accessible routes.** Accessible routes serving recreational boating facilities, including gangways and floating piers, shall comply with *Division* 4 except as modified by the exceptions in *Section 11B*-1003.2.

***11B*-1003.2.1 Boat slips.** Accessible routes serving boat slips shall be permitted to use the exceptions in *Section 11B*-1003.2.1.

Exceptions:

1. Where an existing gangway or series of gangways is replaced or altered, an increase in the length of the gangway shall not be required to comply with *Section 11B*-1003.2 unless required by *Section 11B*-202.4.

2. Gangways shall not be required to comply with the maximum rise specified in *Section 11B*-405.6.

3. Where the total length of a gangway or series of gangways serving as part of a required accessible route is 80 feet (*12192 mm*) minimum, gangways shall not be required to comply with *Section 11B*-405.2.

4. Where facilities contain fewer than 25 boat slips and the total length of the gangway or series of gangways serving as part of a required accessible route is 30 feet (*9144* mm) minimum, gangways shall not be required to comply with *Section 11B*-405.2.

5. Where gangways connect to transition plates, landings specified by *Section 11B*-405.7 shall not be required.

6. Where gangways and transition plates connect and are required to have handrails, handrail extensions shall not be required. Where handrail extensions are provided on gangways or transition plates, the handrail extensions shall not be required to be parallel with the ground or floor surface.

7. The cross slope specified in *Sections 11B*-403.3 and *11B*-405.3 for gangways, transition plates, and floating piers that are part of accessible routes shall be measured in the static position.

8. Changes in level complying with *Sections 11B*-303.3 and *11B*-303.4 shall be permitted on the surfaces of gangways and boat launch ramps.

USDOJ

Advisory 11B-1003.2.1 Boat slips Exception 3. The following example shows how exception 3 would be applied: A gangway is provided to a floating pier which is required to be on an accessible route. The vertical distance is 10 feet (3050 mm) between the elevation where the gangway departs the landside connection and the elevation of the pier surface at the lowest water level. Exception 3 permits the gangway to be 80 feet (24 m) long. Another design solution would be to have two 40 foot (12 m) plus continuous gangways joined together at a float, where the float (as the water level falls) will stop dropping at an elevation five feet below the landside connection. The length of transition plates would not be included in determining if the gangway(s) meet the requirements of the exception. ■

***11B*-1003.2.2 Boarding piers at boat launch ramps.** Accessible routes serving boarding piers at boat launch ramps shall be permitted to use the exceptions in *Section 11B*-1003.2.2.

Exceptions:

1. Accessible routes serving floating boarding piers shall be permitted to use Exceptions 1, 2, 5, 6, 7 and 8 in *Section 11B*-1003.2.1.

2. Where the total length of the gangway or series of gangways serving as part of a required accessible route is 30 feet (*9144* mm) minimum, gangways shall not be required to comply with *Section 11B*-405.2.

3. Where the accessible route serving a floating boarding pier or skid pier is located within a boat launch ramp, the portion of the accessible route located within the boat launch ramp shall not be required to comply with *Section 11B*-405.

***11B*-1003.3 Clearances.** Clearances at boat slips and on boarding piers at boat launch ramps shall comply with *Section 11B*-1003.3.

USDOJ

Advisory 11B-1003.3 Clearances. Although the minimum width of the clear pier space is 60 inches (1525 mm), it is recommended that piers be wider than 60 inches (1525 mm) to improve the safety for persons with disabilities, particularly on floating piers. ■

***11B*-1003.3.1 Boat slip clearance.** Boat slips shall provide clear pier space 60 inches (*1524* mm) wide minimum and at least as long as the boat slips. Each 10 feet (*3048* mm) maximum of linear pier edge serving boat slips shall contain at least one continuous clear opening 60 inches (*1524* mm) wide minimum.

Exceptions:

1. Clear pier space shall be permitted to be 36 inches (*914* mm) wide minimum for a length of 24 inches (610 mm) maximum, provided that multiple 36 inch (*914* mm) wide segments are separated by segments that are 60 inches (*1524* mm) wide minimum and 60 inches (*1524* mm) long minimum.

2. Edge protection shall be permitted at the continuous clear openings, provided that it is 4 inches (*102* mm) high maximum and 2 inches (51 mm) wide maximum.

3. In existing piers, clear pier space shall be permitted to be located perpendicular to the boat slip and shall extend the width of the boat slip, where the facility has at least one boat slip complying with *Section 11B*-1003.3, and further compliance with *Section 11B*-1003.3 would result in a reduction in the number of boat slips available or result in a reduction of the widths of existing slips.

USDOJ

Advisory 11B-1003.3.1 Boat slip clearance Exception 3. Where the conditions in exception 3 are satisfied, existing facilities are only required to have one accessible boat slip with a pier clearance which runs the length of the slip. All other accessible slips are allowed to have the required pier clearance at the head of the slip. Under this exception, at piers with perpendicular boat slips, the width of most "finger piers" will remain unchanged. However, where mooring systems for floating piers are replaced as part of pier alteration projects, an opportunity may exist for increasing accessibility. Piers may be reconfigured to allow an increase in the number of wider finger piers, and serve as accessible boat slips. ■

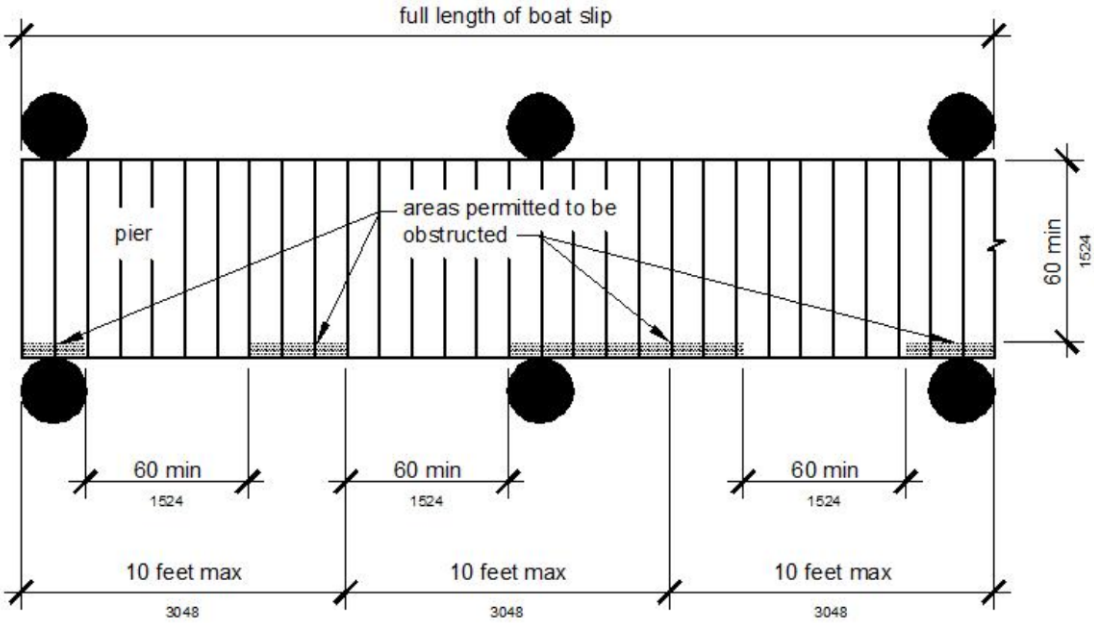

Figure *11B*-1003.3.1
Boat Slip Clearance

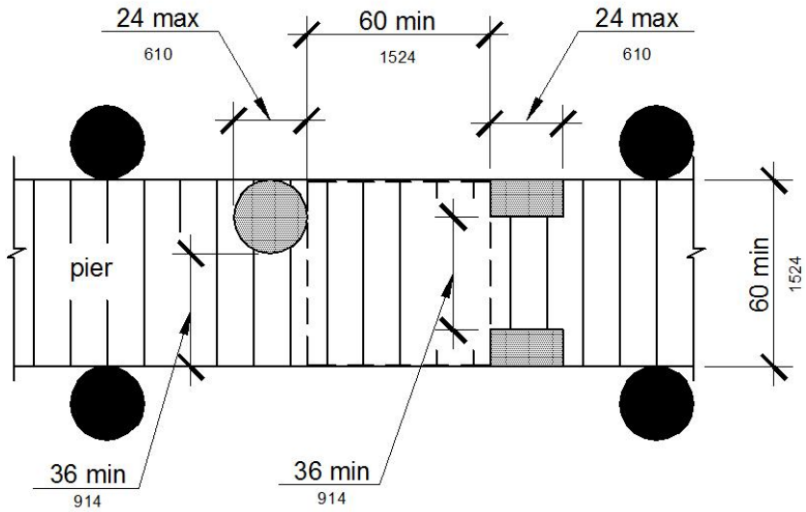

Figure *11B*-1003.3.1 (Exception 1)
Clear Pier Space Reduction at Boat Slips

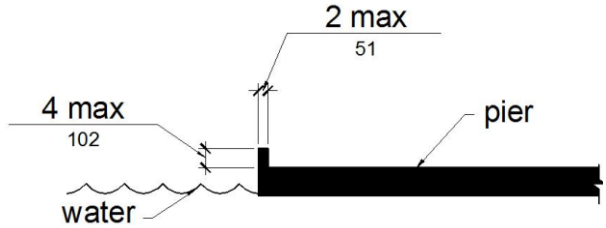

Figure *11B*-1003.3.1 (Exception 2)
Edge Protection at Boat Slips

***11B*-1003.3.2 Boarding pier clearances.** Boarding piers at boat launch ramps shall provide clear pier space 60 inches (*1524* mm) wide minimum and shall extend the full length of the boarding pier. Every 10 feet (*3048* mm) maximum of linear pier edge shall contain at least one continuous clear opening 60 inches (*1524* mm) wide minimum.

Exceptions:

1. The clear pier space shall be permitted to be 36 inches (*914* mm) wide minimum for a length of 24 inches (610 mm) maximum provided that multiple 36 inch (*914* mm) wide segments are separated by segments that are 60 inches (*1524* mm) wide minimum and 60 inches (*1524* mm) long minimum.

2. Edge protection shall be permitted at the continuous clear openings provided that it is 4 inches (*102* mm) high maximum and 2 inches (51 mm) wide maximum.

USDOJ

Advisory 11B-1003.3.2 Boarding pier clearances. These requirements do not establish a minimum length for accessible boarding piers at boat launch ramps. The accessible boarding pier should have a length at least equal to that of other boarding piers provided at the facility. If no other boarding pier is provided, the pier would have a length equal to what would have been provided if no access requirements applied. The entire length of accessible boarding piers would be required to comply with the same technical provisions that apply to accessible boat slips. For example, at a launch ramp, if a 20 foot (6100 mm) long accessible boarding pier is provided, the entire 20 feet (6100 mm) must comply with the pier clearance requirements in Section 11B-1003.3. Likewise, if a 60 foot (18 m) long accessible boarding pier is provided, the pier clearance requirements in Section 11B-1003.3 would apply to the entire 60 feet (18 m).

The following example applies to a boat launch ramp boarding pier: A chain of floats is provided on a launch ramp to be used as a boarding pier which is required to be accessible by Section 11B-1003.3.2. At high water, the entire chain is floating and a transition plate connects the first float to the surface of the launch ramp. As the water level decreases, segments of the chain end up resting on the launch ramp surface, matching the slope of the launch ramp. ■

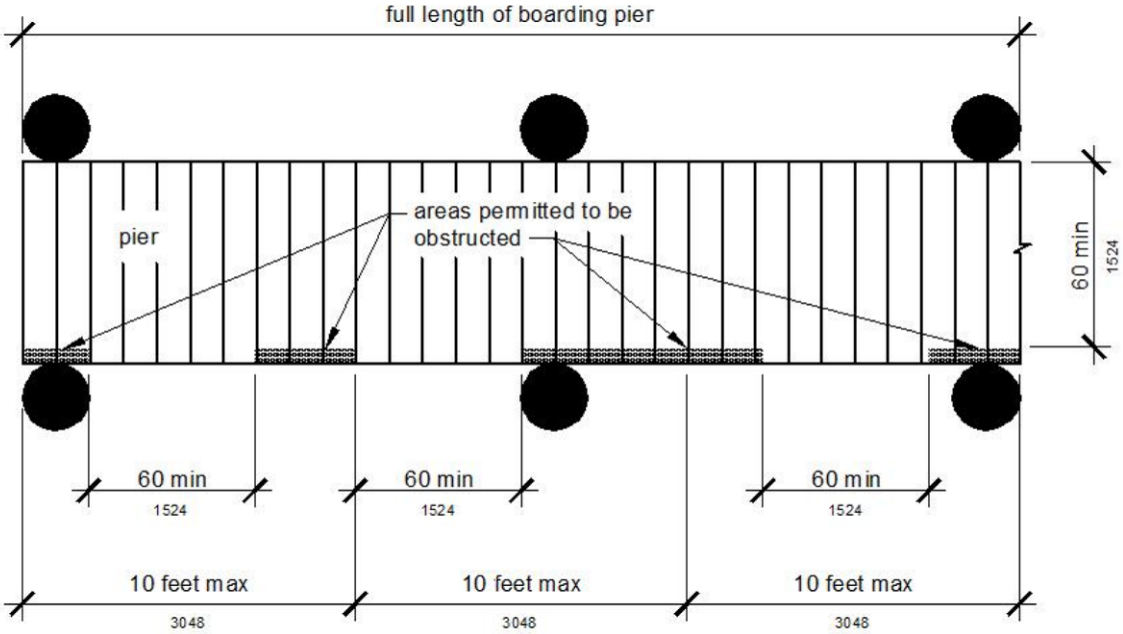

Figure *11B*-1003.3.2
Boarding Pier Clearance

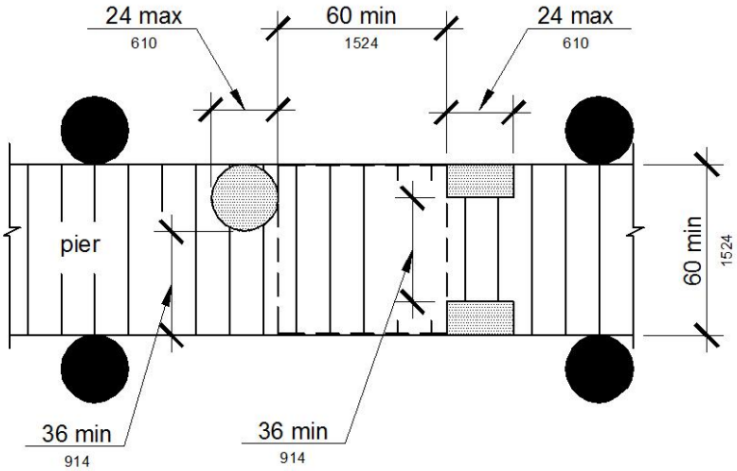

Figure *11B*-1003.3.2 (Exception 1)
Clear Pier Space Reduction at Boarding Piers

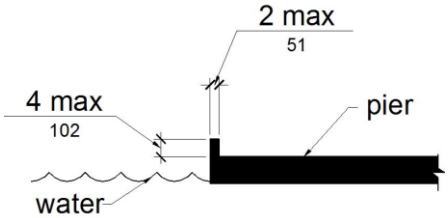

Figure *11B*-1003.3.2 (Exception 2)
Edge Protection at Boarding Piers

***11B*-1004 Exercise machines and equipment**

***11B*-1004.1 Clear floor space.** Exercise machines and equipment shall have a clear floor space complying with *Section 11B*-305 positioned for transfer or for use by an individual seated in a wheelchair. Clear floor or ground spaces required at exercise machines and equipment shall be permitted to overlap.

> USDOJ
>
> **Advisory 11B-1004.1 Clear floor space.** One clear floor or ground space is permitted to be shared between two pieces of exercise equipment. To optimize space use, designers should carefully consider layout options such as connecting ends of the row and center aisle spaces. The position of the clear floor space may vary greatly depending on the use of the equipment or machine. For example, to provide access to a shoulder press machine, clear floor space next to the seat would be appropriate to allow for transfer. Clear floor space for a bench press machine designed for use by an individual seated in a wheelchair, however, will most likely be centered on the operating mechanisms. ■

***11B*-1005 Fishing piers and platforms**

***11B*-1005.1 Accessible routes.** Accessible routes serving fishing piers and platforms, including gangways and floating piers, shall comply with *Division* 4.

Exceptions:

1. Accessible routes serving floating fishing piers and platforms shall be permitted to use Exceptions 1, 2, 5, 6, 7 and 8 in *Section 11B*-1003.2.1.

2. Where the total length of the gangway or series of gangways serving as part of a required accessible route is 30 feet (*9144* mm) minimum, gangways shall not be required to comply with *Section 11B*-405.2.

***11B*-1005.2 Railings.** Where provided, railings, guards, or handrails shall comply with *Section 11B*-1005.2.

***11B*-1005.2.1 Height.** At least 25 percent of the railings, guards, or handrails shall be 34 inches (*864* mm) maximum above the ground or deck surface.

Exception: Where a guard complying with *Chapter 10, Sections 1013.2 through 1013.4* is provided, the guard shall not be required to comply with *Section 11B*-1005.2.1.

***11B*-1005.2.1.1 Dispersion.** Railings, guards, or handrails required to comply with *Section 11B*-1005.2.1 shall be dispersed throughout the fishing pier or platform.

> USDOJ
>
> **Advisory 11B-1005.2.1.1 Dispersion.** Portions of the railings that are lowered to provide fishing opportunities for persons with disabilities must be located in a variety of locations on the fishing pier or platform to give people a variety of locations to fish. Different fishing locations may provide varying water depths, shade (at certain times of the day), vegetation, and proximity to the shoreline or bank. ■

***11B*-1005.3 Edge protection.** Where railings, guards, or handrails complying with *Section 11B*-1005.2 are provided, edge protection complying with *Section 11B*-1005.3.1 or *11B*-1005.3.2 shall be provided.

Advisory 11B-1005.3 Edge protection. Edge protection is required only where railings, guards, or handrails are provided on a fishing pier or platform. Edge protection will prevent wheelchairs or other mobility devices from slipping off the fishing pier or platform. Extending the deck of the fishing pier or platform 12 inches (305 mm) where the 34 inch (865 mm) high railing is provided is an alternative design, permitting individuals using wheelchairs or other mobility devices to pull into a clear space and move beyond the face of the railing. In such a design, curbs or barriers are not required. ■

***11B*-1005.3.1 Curb or barrier.** Curbs or barriers shall extend 2 inches (51 mm) minimum above the surface of the fishing pier or platform.

***11B*-1005.3.2 Extended ground or deck surface.** The ground or deck surface shall extend 12 inches (305 mm) minimum beyond the inside face of the railing. Toe clearance shall be provided and shall be 30 inches (*762* mm) wide minimum and 9 inches (*229* mm) minimum above the ground or deck surface beyond the railing.

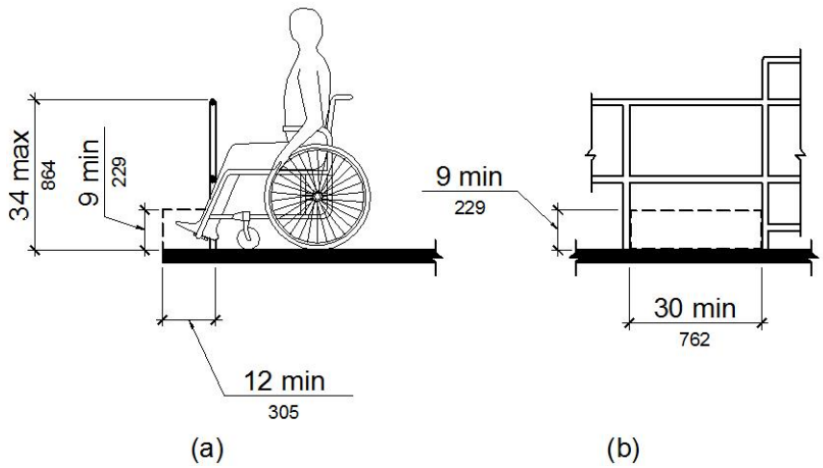

Figure *11B*-1005.3.2
Extended Ground or Deck Surface at Fishing Piers and Platforms

***11B*-1005.4 Clear floor or ground space.** At each location where there are railings, guards, or handrails complying with *Section 11B*-1005.2.1, a clear floor or ground space complying with *Section 11B*-305 shall be provided. Where there are no railings, guards, or handrails, at least one clear floor or ground space complying with *Section 11B*-305 shall be provided on the fishing pier or platform.

***11B*-1005.5 Turning space.** At least one turning space complying with *Section 11B*-304.3 shall be provided on fishing piers and platforms.

***11B*-1006 Golf facilities**

***11B*-1006.1 General.** Golf facilities shall comply with *Section 11B*-1006.

***11B*-1006.2 Accessible routes.** Accessible routes serving teeing grounds, practice teeing grounds, putting greens, practice putting greens, teeing stations at driving ranges, course weather shelters, golf car rental areas, bag drop areas, and course toilet rooms shall comply with *Division* 4 and shall be 48 inches (*1219* mm) wide minimum. Where handrails are provided, accessible routes shall be 60 inches (*1524* mm) wide minimum.

Exception: Handrails shall not be required on golf courses. Where handrails are provided on golf courses, the handrails shall not be required to comply with *Section 11B*-505.

USDOJ

Advisory 11B-1006.2 Accessible routes. The 48 inch (1220 mm) minimum width for the accessible route is necessary to ensure passage of a golf car on either the accessible route or the golf car passage. This is important where the accessible route is used to connect the golf car rental area, bag drop areas, practice putting greens, practice teeing grounds, course toilet rooms, and course weather shelters. These are areas outside the boundary of the golf course, but are areas where an individual using an adapted golf car may travel. A golf car passage may not be substituted for other accessible routes to be located outside the boundary of the course. For example, an accessible route connecting an accessible parking space to the entrance of a golf course clubhouse is not covered by this provision.

Providing a golf car passage will permit a person that uses a golf car to practice driving a golf ball from the same position and stance used when playing the game. Additionally, the space required for a person using a golf car to enter and maneuver within the teeing stations required to be accessible should be considered. ■

***11B*-1006.3 Golf car passages.** Golf car passages shall comply with *Section 11B*-1006.3.

***11B*-1006.3.1 Clear width.** The clear width of golf car passages shall be 48 inches (*1219* mm) minimum.

***11B*-1006.3.2 Barriers.** Where curbs or other constructed barriers prevent golf cars from entering a fairway, openings 60 inches (*1524* mm) wide minimum shall be provided at intervals not to exceed 75 yards (69 m).

***11B*-1006.4 Weather shelters.** A clear floor or ground space 60 inches (*1524* mm) minimum by 96 inches (*2438* mm) minimum shall be provided within weather shelters.

***11B*-1007 Miniature golf facilities**

***11B*-1007.1 General.** Miniature golf facilities shall comply with *Section 11B*-1007.

***11B*-1007.2 Accessible routes.** Accessible routes serving holes on miniature golf courses shall comply with *Division* 4. Accessible routes located on playing surfaces of miniature golf holes shall be permitted to use the exceptions in *Section 11B*-1007.2.

Exceptions:

1. Playing surfaces shall not be required to comply with *Section 11B*-302.2.
2. Where accessible routes intersect playing surfaces of holes, a 1 inch (25 mm) maximum curb shall be permitted for a width of 32 inches (*813* mm) minimum.
3. A slope not steeper than 1:4 for a 4 inch (*102* mm) maximum rise shall be permitted.
4. Ramp landing slopes specified by *Section 11B*-405.7.1 shall be permitted to be 1:20 maximum.
5. Ramp landing length specified by *Section 11B*-405.7.3 shall be permitted to be 48 inches (*1219* mm) long minimum.

6. Ramp landing size specified by *Section 11B*-405.7.4 shall be permitted to be 48 inches (*1219* mm) minimum by 60 inches (*1524* mm) minimum.

7. Handrails shall not be required on holes. Where handrails are provided on holes, the handrails shall not be required to comply with *Section 11B*-505.

***11B*-1007.3 Miniature golf holes.** Miniature golf holes shall comply with *Section 11B*-1007.3.

***11B*-1007.3.1 Start of play.** A clear floor or ground space 48 inches (*1219* mm) minimum by 60 inches (*1524* mm) minimum with slopes not steeper than 1:48 shall be provided at the start of play.

***11B*-1007.3.2 Golf club reach range area.** All areas within holes where golf balls rest shall be within 36 inches (*914* mm) maximum of a clear floor or ground space 36 inches (*914* mm) wide minimum and 48 inches (*1219* mm) long minimum having a running slope not steeper than 1:20. The clear floor or ground space shall be served by an accessible route.

USDOJ

Advisory 11B-1007.3.2 Golf club reach range area. The golf club reach range applies to all holes required to be accessible. This includes accessible routes provided adjacent to or, where provided, on the playing surface of the hole. ■

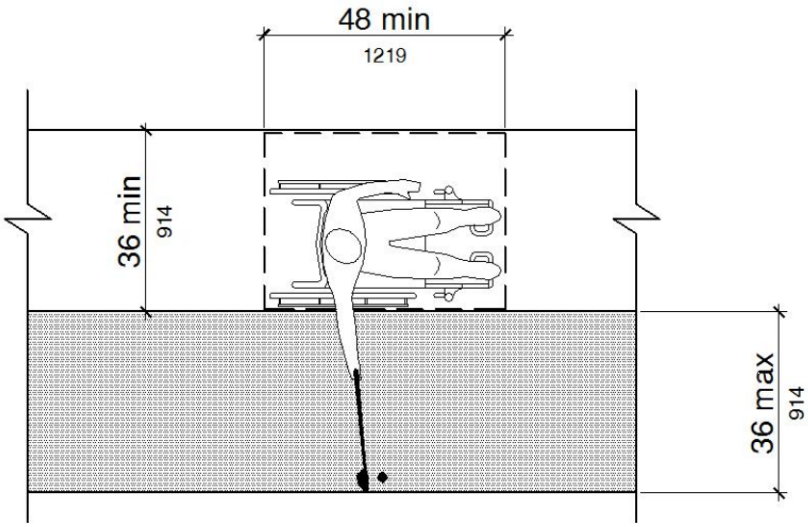

Note: Running Slope of Clear Floor or Ground Space Not Steeper Than 1:20

Figure *11B*-1007.3.2
Golf Club Reach Range Area

***11B*-1008 Play areas**

***11B*-1008.1 General.** Play areas shall comply with *Section 11B*-1008.

***11B*-1008.2 Accessible routes.** Accessible routes serving play areas shall comply with *Division* 4 and *Section 11B*-1008.2 and shall be permitted to use the exceptions in *Sections 11B*-1008.2.1 through *11B*-1008.2.3. Where accessible routes serve ground level play components, the vertical clearance shall be 80 inches high (*2032* mm) minimum.

***11B*-1008.2.1 Ground level and elevated play components.** Accessible routes serving ground level play components and elevated play components shall be permitted to use the exceptions in *Section 11B*-1008.2.1.

Exceptions:

1. Transfer systems complying with *Section 11B*-1008.3 shall be permitted to connect elevated play components except where 20 or more elevated play components are provided no more than 25 percent of the elevated play components shall be permitted to be connected by transfer systems.

2. Where transfer systems are provided, an elevated play component shall be permitted to connect to another elevated play component as part of an accessible route.

***11B*-1008.2.2 Soft contained play structures.** Accessible routes serving soft contained play structures shall be permitted to use the exception in *Section 11B*-1008.2.2.

Exception: Transfer systems complying with *Section 11B*-1008.3 shall be permitted to be used as part of an accessible route.

***11B*-1008.2.3 Water play components.** Accessible routes serving water play components shall be permitted to use the exceptions in *Section 11B*-1008.2.3.

Exceptions:

1. Where the surface of the accessible route, clear floor or ground spaces, or turning spaces serving water play components is submerged, compliance with *Sections 11B*-302, *11B*-403.3, *11B*-405.2, *11B*-405.3, and *11B*-1008.2.6 shall not be required.

2. Transfer systems complying with *Section 11B*-1008.3 shall be permitted to connect elevated play components in water.

USDOJ

Advisory 11B-1008.2.3 Water play components. Personal wheelchairs and mobility devices may not be appropriate for submerging in water when using play components in water. Some may have batteries, motors, and electrical systems that when submerged in water may cause damage to the personal mobility device or wheelchair or may contaminate the water. Providing an aquatic wheelchair made of non-corrosive materials and designed for access into the water will protect the water from contamination and avoid damage to personal wheelchairs. ■

***11B*-1008.2.4 Clear width.** Accessible routes connecting play components shall provide a clear width complying with *Section 11B*-1008.2.4.

***11B*-1008.2.4.1 Ground level.** At ground level, the clear width of accessible routes shall be 60 inches (*1524* mm) minimum.

Exceptions:

1. In play areas less than 1000 square feet (93 m^2), the clear width of accessible routes shall be permitted to be 44 inches (*1118* mm) minimum, if at least one turning space complying with *Section 11B*-304.3 is provided where the restricted accessible route exceeds 30 feet (*9144* mm) in length.

2. The clear width of accessible routes shall be permitted to be 36 inches (*914* mm) minimum for a distance of 60 inches (*1524* mm) maximum provided that multiple reduced width segments are separated by segments that are 60 inches (*1524* mm) wide minimum and 60 inches (*1524* mm) long minimum.

***11B*-1008.2.4.2 Elevated.** The clear width of accessible routes connecting elevated play components shall be 36 inches (*914* mm) minimum.

Exceptions:

1. The clear width of accessible routes connecting elevated play components shall be permitted to be reduced to 32 inches (*813* mm) minimum for a distance of 24 inches (610 mm) maximum provided that reduced width segments are separated by segments that are 48 inches (*1219* mm) long minimum and 36 inches (*914* mm) wide minimum.

2. The clear width of transfer systems connecting elevated play components shall be permitted to be 24 inches (610 mm) minimum.

***11B*-1008.2.5 Ramps.** Within play areas, ramps connecting ground level play components and ramps connecting elevated play components shall comply with *Section 11B*-1008.2.5.

***11B*-1008.2.5.1 Ground level.** Ramp runs connecting ground level play components shall have a running slope not steeper than 1:16.

***11B*-1008.2.5.2 Elevated.** The rise for any ramp run connecting elevated play components shall be 12 inches (305 mm) maximum.

***11B*-1008.2.5.3 Handrails.** Where required on ramps serving play components, the handrails shall comply with *Section 11B*-505 except as modified by *Section 11B*-1008.2.5.3.

Exceptions:

1. Handrails shall not be required on ramps located within ground level use zones.

2. Handrail extensions shall not be required.

***11B*-1008.2.5.3.1 Handrail gripping surfaces.** Handrail gripping surfaces with a circular cross section shall have an outside diameter of 0.95 inch (24 mm) minimum and 1.55 inches (39 mm) maximum. Where the shape of the gripping surface is non-circular, the handrail shall provide an equivalent gripping surface.

***11B*-1008.2.5.3.2 Handrail height.** The top of handrail gripping surfaces shall be 20 inches (*508* mm) minimum and 28 inches (*711* mm) maximum above the ramp surface.

***11B*-1008.2.6 Ground surfaces.** Ground surfaces on accessible routes, clear floor or ground spaces, and turning spaces shall comply with *Section 11B*-1008.2.6.

***11B*-1008.2.6.1 Accessibility.** Ground surfaces shall comply with ASTM F 1951. Ground surfaces shall be inspected and maintained regularly and frequently to ensure continued compliance with ASTM F 1951.

***11B*-1008.2.6.2 Use zones.** Ground surfaces located within use zones shall comply with ASTM F 1292 *(1999 edition or 2004 edition)*.

USDOJ

Advisory 11B-1008.2.6 Ground surfaces. Ground surfaces must be inspected and maintained regularly to ensure continued compliance with the ASTM F 1951 standard. The type of surface material selected and play area use levels will determine the frequency of inspection and maintenance activities. ■

***11B*-1008.3 Transfer systems.** Where transfer systems are provided to connect to elevated play components, transfer systems shall comply with *Section 11B*-1008.3.

USDOJ

Advisory 11B-1008.3 Transfer systems. Where transfer systems are provided, consideration should be given to the distance between the transfer system and the elevated play components. Moving between a transfer platform and a series of transfer steps requires extensive exertion for some children. Designers should minimize the distance between the points where a child transfers from a wheelchair or mobility device and where the elevated play components are located. Where elevated play components are used to connect to another elevated play component instead of an accessible route, careful consideration should be used in the selection of the play components used for this purpose. ■

***11B*-1008.3.1 Transfer platforms.** Transfer platforms shall be provided where transfer is intended from wheelchairs or other mobility aids. Transfer platforms shall comply with *Section 11B*-1008.3.1.

***11B*-1008.3.1.1 Size.** Transfer platforms shall have level surfaces 14 inches (*356* mm) deep minimum and 24 inches (610 mm) wide minimum.

***11B*-1008.3.1.2 Height.** The height of transfer platforms shall be 11 inches (*279* mm) minimum and 18 inches (*457* mm) maximum measured to the top of the surface from the ground or floor surface.

***11B*-1008.3.1.3 Transfer space.** A transfer space complying with *Sections 11B*-305.2 and *11B*-305.3 shall be provided adjacent to the transfer platform. The 48 inch (*1219* mm) long minimum dimension of the transfer space shall be centered on and parallel to the 24 inch (610 mm) long minimum side of the transfer platform. The side of the transfer platform serving the transfer space shall be unobstructed.

***11B*-1008.3.1.4 Transfer supports.** At least one means of support for transferring shall be provided.

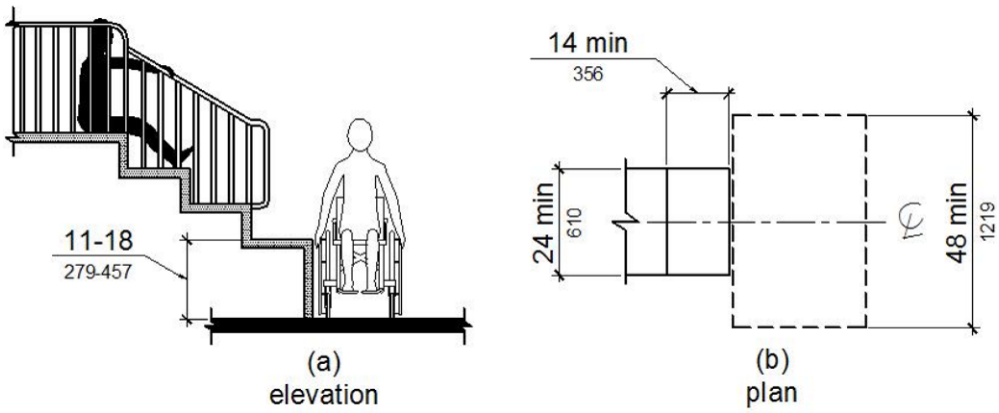

Figure *11B*-1008.3.1
Transfer Platforms

***11B*-1008.3.2 Transfer steps.** Transfer steps shall be provided where movement is intended from transfer platforms to levels with elevated play components required to be on accessible routes. Transfer steps shall comply with *Section 11B*-1008.3.2.

***11B*-1008.3.2.1 Size.** Transfer steps shall have level surfaces 14 inches (*356* mm) deep minimum and 24 inches (610 mm) wide minimum.

***11B*-1008.3.2.2 Height.** Each transfer step shall be 8 inches (*203* mm) high maximum.

***11B*-1008.3.2.3 Transfer supports.** At least one means of support for transferring shall be provided.

USDOJ

Advisory 11B-1008.3.2.3 Transfer supports. Transfer supports are required on transfer platforms and transfer steps to assist children when transferring. Some examples of supports include a rope loop, a loop type handle, a slot in the edge of a flat horizontal or vertical member, poles or bars, or D rings on the corner posts. ■

11B-1008.3.2.4 Contrasting stripe. *Striping complying with Section 11B-504.4.1 shall be provided at each transfer step.*

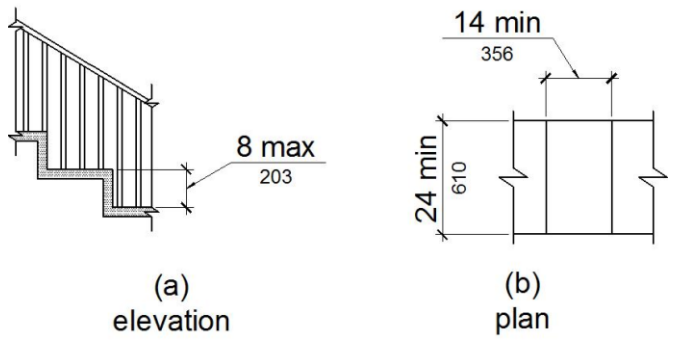

Figure *11B*-1008.3.2
Transfer Steps

***11B*-1008.4 Play components.** Ground level play components on accessible routes and elevated play components connected by ramps shall comply with *Section 11B*-1008.4.

***11B*-1008.4.1 Turning space.** At least one turning space complying with *Section 11B*-304 shall be provided on the same level as play components. Where swings are provided, the turning space shall be located immediately adjacent to the swing.

***11B*-1008.4.2 Clear floor or ground space.** Clear floor or ground space complying with *Sections 11B*-305.2 and *11B*-305.3 shall be provided at play components.

USDOJ

Advisory 11B-1008.4.2 Clear floor or ground space. Clear floor or ground spaces, turning spaces, and accessible routes are permitted to overlap within play areas. A specific location has not been designated for the clear floor or ground spaces or turning spaces, except swings, because each play component may require that the spaces be placed in a unique location. Where play components include a seat or entry point, designs that provide for an

unobstructed transfer from a wheelchair or other mobility device are recommended. This will enhance the ability of children with disabilities to independently use the play component.

When designing play components with manipulative or interactive features, consider appropriate reach ranges for children seated in wheelchairs. The following table provides guidance on reach ranges for children seated in wheelchairs. These dimensions apply to either forward or side reaches. The reach ranges are appropriate for use with those play components that children seated in wheelchairs may access and reach. Where transfer systems provide access to elevated play components, the reach ranges are not appropriate. ■

Children's Reach Ranges			
Forward or Side Reach	**Ages 3 and 4**	**Ages 5 through 8**	**Ages 9 through 12**
High (maximum)	36 in (915 mm)	40 in (1015 mm)	44 in (1120 mm)
Low (minimum)	20 in (510 mm)	18 in (455 mm)	16 in (405 mm)

***11B*-1008.4.3 Play tables.** Where play tables are provided, knee clearance 24 inches (610 mm) high minimum, 17 inches deep (*432* mm) minimum, and 30 inches (*762* mm) wide minimum shall be provided. The tops of rims, curbs, or other obstructions shall be 31 inches (*787* mm) high maximum.

Exception: Play tables designed and constructed primarily for children 5 years and younger shall not be required to provide knee clearance where the clear floor or ground space required by *Section 11B*-1008.4.2 is arranged for a parallel approach.

***11B*-1008.4.4 Entry points and seats.** Where play components require transfer to entry points or seats, the entry points or seats shall be 11 inches (*279* mm) minimum and 24 inches (610 mm) maximum from the clear floor or ground space.

Exception: Entry points of slides shall not be required to comply with *Section 11B*-1008.4.4.

***11B*-1008.4.5 Transfer supports.** Where play components require transfer to entry points or seats, at least one means of support for transferring shall be provided.

***11B*-1009 Swimming pools, wading pools, and spas**

***11B*-1009.1 General.** Where provided, pool lifts, sloped entries, transfer walls, transfer systems, and pool stairs shall comply with *Section 11B*-1009.

***11B*-1009.2 Pool lifts.** Pool lifts shall comply with *Section 11B*-1009.2.

USDOJ

Advisory 1009.2 Pool lifts. There are a variety of seats available on pool lift. Pool lift seats with backs enable a larger population of persons with disabilities to use the lift. Pool lift seats that consist of materials that resist corrosion and provide a firm base to transfer will be usable by a wider range of people with disabilities. Additional options such as armrests, head rests, seat belts, and leg support will enhance accessibility and better accommodate people with a wide range of disabilities. ■

***11B*-1009.2.1 Pool lift location.** Pool lifts shall be located where the water level *is 36 inches (914 mm) minimum and 48 inches (1219 mm) maximum.*

Exceptions:

1. Where the entire pool depth is *less than 36 inches (914 mm) or* greater than 48 inches (*1219* mm), compliance with *Section 11B*-1009.2.1 shall not be required.

2. Where multiple pool lift locations are provided, no more than one pool lift shall be required to be located in an area where the water level is 48 inches (*1219* mm) maximum.

***11B*-1009.2.2 Seat location.** In the raised position, the centerline of the seat shall be located over the deck and 16 inches (*406* mm) minimum from the edge of the pool. The deck surface between the centerline of the seat and the pool edge shall have a slope not steeper than 1:48.

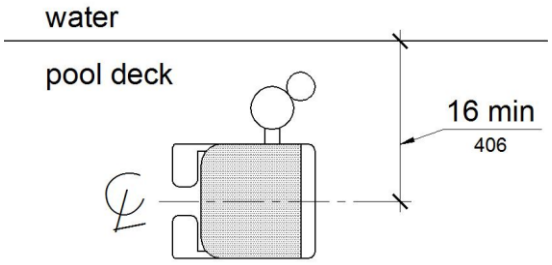

Figure *11B*-1009.2.2
Pool Lift Seat Location

***11B*-1009.2.3 Clear deck space.** On the side of the seat opposite the water, a clear deck space shall be provided parallel with the seat. The space shall be 36 inches (*914* mm) wide minimum and shall extend forward 48 inches (*1219* mm) minimum from a line located 12 inches (305 mm) behind the rear edge of the seat. The clear deck space shall have a slope not steeper than 1:48.

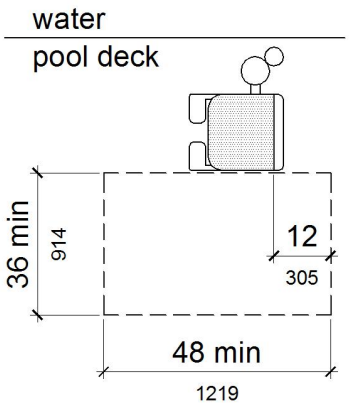

Figure *11B*-1009.2.3
Clear Deck Space at Pool Lifts

***11B*-1009.2.4 Seat.** *The seat shall be rigid and shall have a back support that is at least 12 inches (305 mm) tall.* The height of the lift seat shall be designed to allow a stop at *17 inches (432 mm)* minimum to 19 inches (*483* mm) maximum measured from the deck to the top of the seat surface when in the raised (load) position. *The seat shall have a restraint for the use of the occupant with operable parts complying with Section 11B-309.*

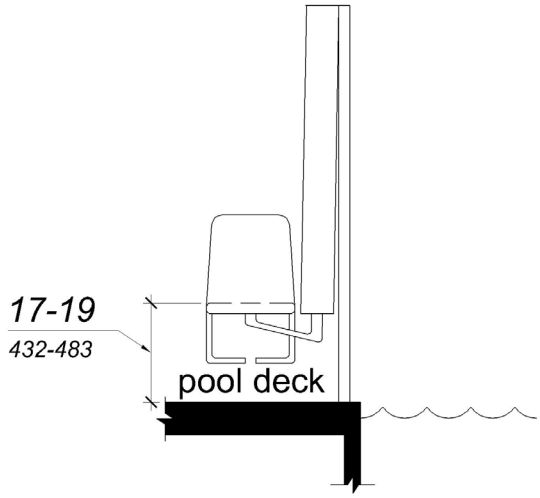

Figure *11B*-1009.2.4
Pool Lift Seat Height

***11B*-1009.2.5 Seat width.** The seat shall be 16 inches (*406* mm) wide minimum.

***11B*-1009.2.6 Footrests and armrests.** Footrests shall be provided and shall move with the seat. *The seat shall have two armrests. The* armrest positioned opposite the water shall be removable or shall fold clear of the seat when the seat is in the raised (load) position.

Exception: Footrests shall not be required on pool lifts provided in spas.

***11B*-1009.2.7 Operation.** The lift shall be capable of unassisted operation from both the deck and water levels. Controls and operating mechanisms shall be unobstructed when the lift is in use and shall comply with *Section 11B*-309.4. *The lift shall be stable and not permit unintended movement when a person is getting into or out of the seat.*

USDOJ

Advisory 11B-1009.2.7 Operation. Pool lifts must be capable of unassisted operation from both the deck and water levels. This will permit a person to call the pool lift when the pool lift is in the opposite position. It is extremely important for a person who is swimming alone to be able to call the pool lift when it is in the up position so he or she will not be stranded in the water for extended periods of time awaiting assistance. The requirement for a pool lift to be independently operable does not preclude assistance from being provided. ■

***11B*-1009.2.8 Submerged depth.** The lift shall be designed so that the seat will submerge to a water depth of 18 inches (*457* mm) minimum below the stationary water level.

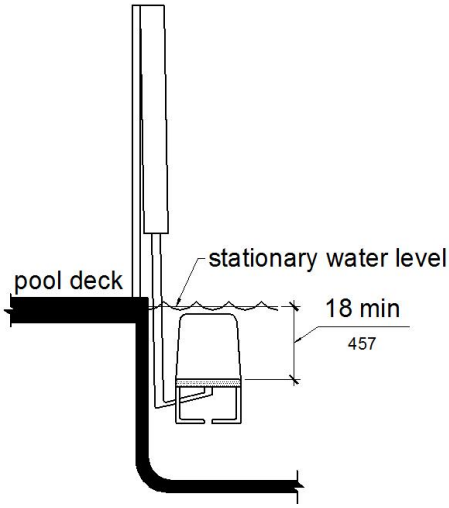

Figure *11B*-1009.2.8
Pool Lift Submerged Depth

***11B*-1009.2.9 Lifting capacity.** Single person pool lifts shall have a weight capacity of 300 pounds (136 kg) minimum and be capable of sustaining a static load of at least one and a half times the rated load.

> **USDOJ**
>
> **Advisory 11B-1009.2.9 Lifting capacity.** Single person pool lifts must be capable of supporting a minimum weight of 300 pounds (136 kg) and sustaining a static load of at least one and a half times the rated load. Pool lifts should be provided that meet the needs of the population they serve. Providing a pool lift with a weight capacity greater than 300 pounds (136 kg) may be advisable. ■

***11B*-1009.3 Sloped entries.** Sloped entries shall comply with *Section 11B*-1009.3.

> **USDOJ**
>
> **Advisory 11B-1009.3 Sloped entries.** Personal wheelchairs and mobility devices may not be appropriate for submerging in water. Some may have batteries, motors, and electrical systems that when submerged in water may cause damage to the personal mobility device or wheelchair or may contaminate the pool water. Providing an aquatic wheelchair made of non-corrosive materials and designed for access into the water will protect the water from contamination and avoid damage to personal wheelchairs or other mobility aids. ■

***11B*-1009.3.1 Sloped entries.** Sloped entries shall comply with *Division* 4 except as modified in *Sections 11B-1009.3.1 through 11B-1009.3.3*.

> **Exception:** Where sloped entries are provided, the surfaces shall not be required to be slip resistant.

***11B*-1009.3.2 Submerged depth.** Sloped entries shall extend to a depth of 24 inches (610 mm) minimum and 30 inches (*762* mm) maximum below the stationary water level. Where landings are required by *Section 11B*-405.7, at least one landing shall be located 24 inches (610 mm) minimum and 30 inches (*762* mm) maximum below the stationary water level.

Exception: In wading pools, the sloped entry and landings, if provided, shall extend to the deepest part of the wading pool.

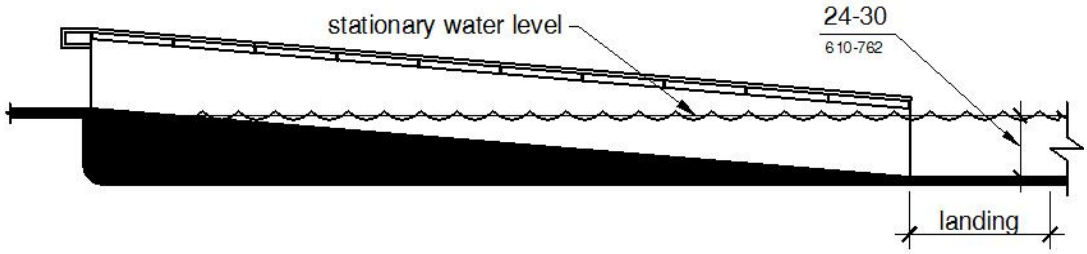

Figure *11B*-1009.3.2
Sloped Entry Submerged Depth

***11B*-1009.3.3 Handrails.** At least two handrails complying with *Section 11B*-505 shall be provided on the sloped entry. The clear width between required handrails shall be 33 inches (*838* mm) minimum and 38 inches (965 mm) maximum.

Exceptions:

1. Handrail extensions specified by *Section 11B*-505.10.1 shall not be required at the bottom landing serving a sloped entry.

2. Where a sloped entry is provided for wave action pools, leisure rivers, sand bottom pools, and other pools where user access is limited to one area, the handrails shall not be required to comply with the clear width requirements of *Section 11B*-1009.3.3.

3. Sloped entries in wading pools shall not be required to provide handrails complying with *Section 11B*-1009.3.3. If provided, handrails on sloped entries in wading pools shall not be required to comply with *Section 11B*-505.

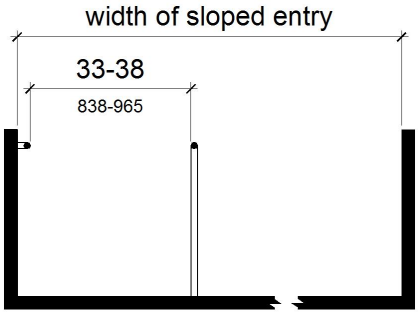

Figure *11B*-1009.3.3
Handrails for Sloped Entry

***11B*-1009.4 Transfer walls.** Transfer walls shall comply with *Section 11B*-1009.4.

***11B*-1009.4.1 Clear deck space.** A clear deck space of 60 inches (*1524* mm) minimum by 60 inches (*1524* mm) minimum with a slope not steeper than 1:48 shall be provided at the base of the transfer wall. Where one grab bar is provided, the clear deck space shall be centered on the grab bar. Where two grab bars are provided, the clear deck space shall be centered on the clearance between the grab bars.

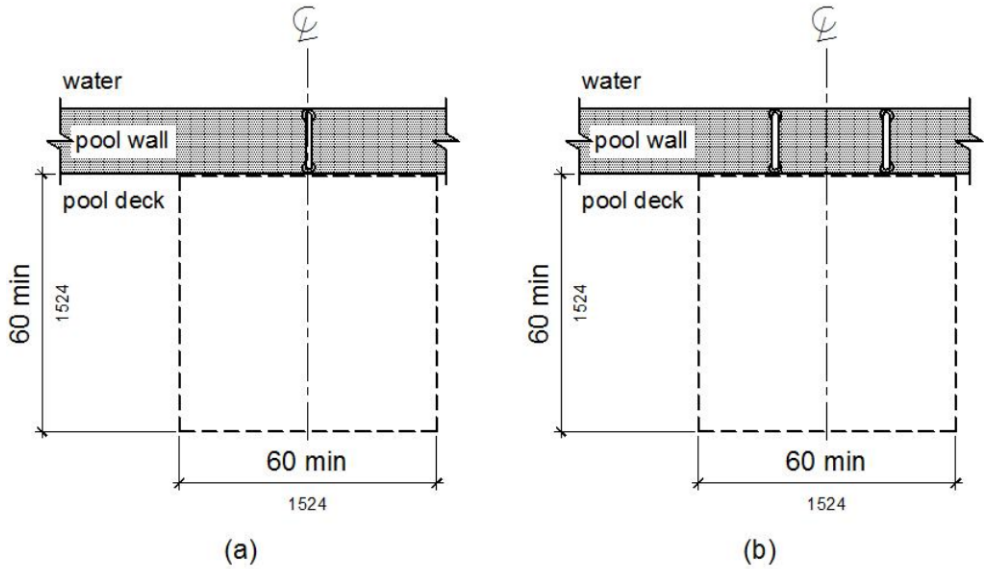

Figure *11B*-1009.4.1
Clear Deck Space at Transfer Walls

***11B*-1009.4.2 Height.** The height of the transfer wall shall be 16 inches (*406* mm) minimum and 19 inches (*483* mm) maximum measured from the deck.

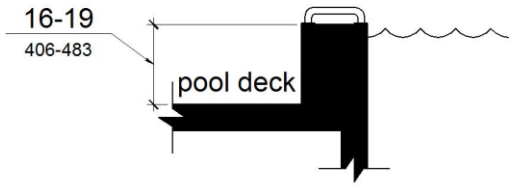

Figure *11B*-1009.4.2
Transfer Wall Height

***11B*-1009.4.3 Wall depth and length.** The depth of the transfer wall shall be 12 inches (305 mm) minimum and 16 inches (*406* mm) maximum. The length of the transfer wall shall be 60 inches (*1524* mm) minimum and shall be centered on the clear deck space.

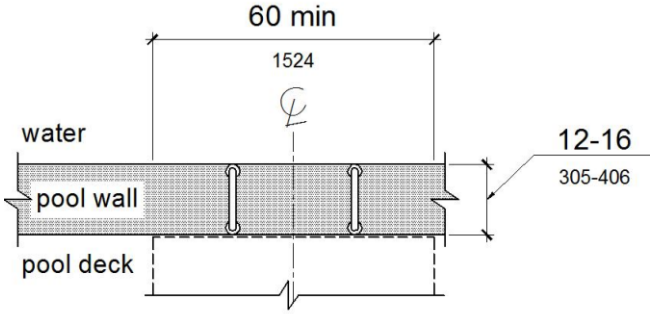

Figure *11B*-1009.4.3
Depth and Length of Transfer Walls

***11B*-1009.4.4 Surface.** Surfaces of transfer walls shall not be sharp and shall have rounded edges.

***11B*-1009.4.5 Grab bars.** At least one grab bar complying with *Section 11B*-609 shall be provided on the transfer wall. Grab bars shall be perpendicular to the pool wall and shall extend the full depth of the transfer wall. The top of the gripping surface shall be 4 inches (*102* mm) minimum and 6 inches (*152* mm) maximum above transfer walls. Where one grab bar is provided, clearance shall be 24 inches (610 mm) minimum on both sides of the grab bar. Where two grab bars are provided, clearance between grab bars shall be 24 inches (610 mm) minimum.

Exception: Grab bars on transfer walls shall not be required to comply with *Section 11B*-609.4.

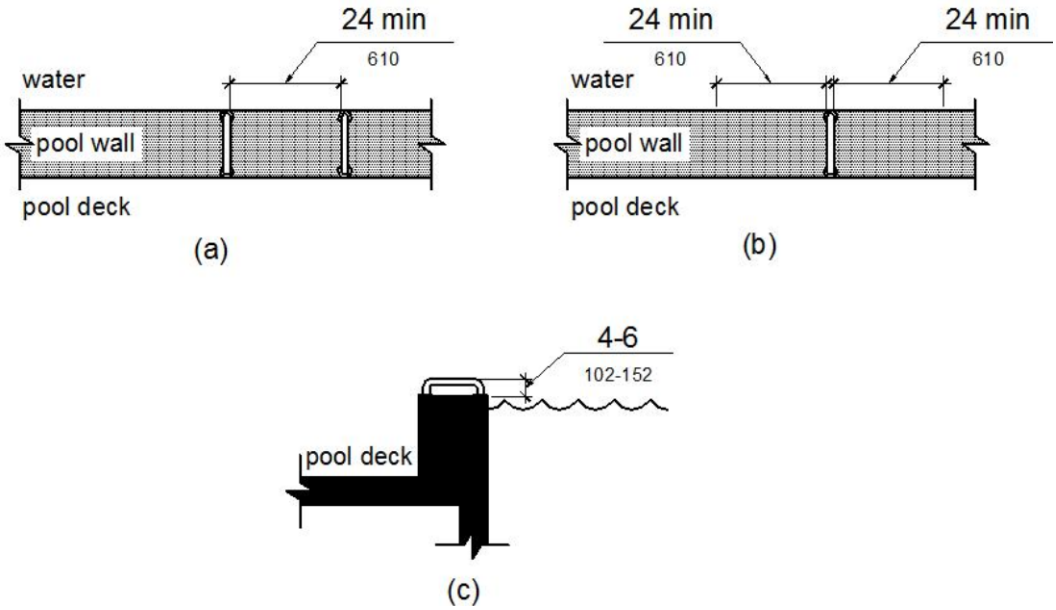

Figure *11B*-1009.4.5
Grab Bars for Transfer Walls

***11B*-1009.5 Transfer systems.** Transfer systems shall comply with *Section 11B*-1009.5.

***11B*-1009.5.1 Transfer platform.** A transfer platform shall be provided at the head of each transfer system. Transfer platforms shall provide 19 inches (*483* mm) minimum clear depth and 24 inches (610 mm) minimum clear width.

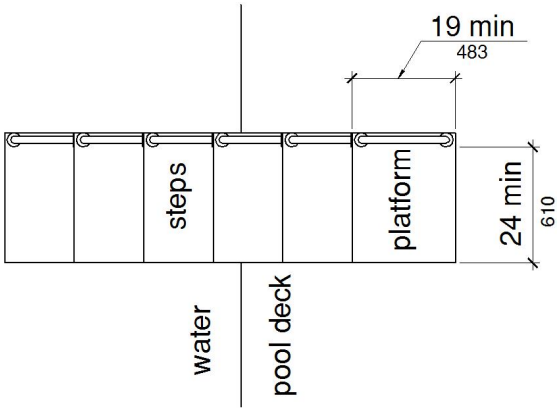

Figure *11B*-1009.5.1
Size of Transfer Platform

***11B*-1009.5.2 Transfer space.** A transfer space of 60 inches (*1524* mm) minimum by 60 inches (*1524* mm) minimum with a slope not steeper than 1:48 shall be provided at the base of the transfer platform surface and shall be centered along a 24 inch (610 mm) minimum side of the transfer platform. The side of the transfer platform serving the transfer space shall be unobstructed.

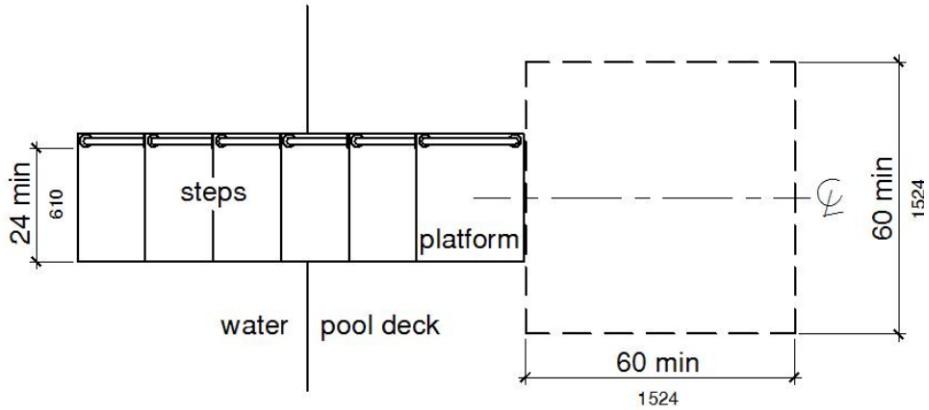

Figure *11B*-1009.5.2
Clear Deck Space at Transfer Platform

***11B*-1009.5.3 Height.** The height of the transfer platform shall comply with *Section 11B*-1009.4.2.

***11B*-1009.5.4 Transfer steps.** Transfer step height shall be 8 inches (*203* mm) maximum. The surface of the bottom tread shall extend to a water depth of 18 inches (*457* mm) minimum below the stationary water level.

USDOJ

Advisory 11B-1009.5.4 Transfer steps. Where possible, the height of the transfer step should be minimized to decrease the distance an individual is required to lift up or move down to reach the next step to gain access. ■

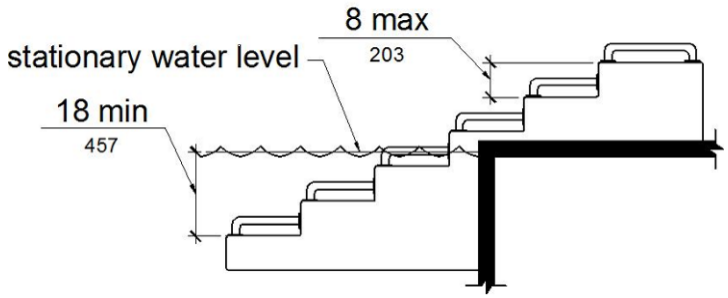

Figure *11B*-1009.5.4
Transfer Steps

***11B*-1009.5.5 Surface.** The surface of the transfer system shall not be sharp and shall have rounded edges.

***11B*-1009.5.6 Size.** Each transfer step shall have a tread clear depth of 14 inches (*356* mm) minimum and 17 inches (*432* mm) maximum and shall have a tread clear width of 24 inches (610 mm) minimum.

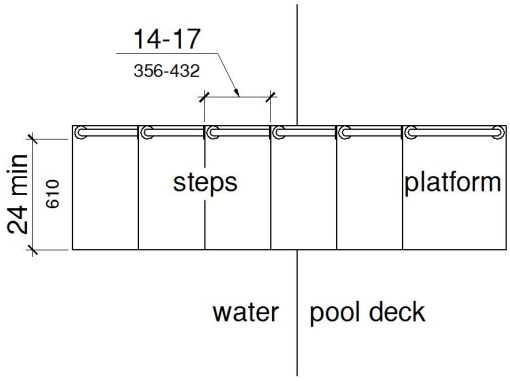

Figure *11B*-1009.5.6
Size of Transfer Steps

***11B*-1009.5.7 Grab bars.** At least one grab bar on each transfer step and the transfer platform or a continuous grab bar serving each transfer step and the transfer platform shall be provided. Where a grab bar is provided on each step, the tops of gripping surfaces shall be 4 inches (*102* mm) minimum and 6 inches (*152* mm) maximum above each step and transfer platform. Where a continuous grab bar is provided, the top of the gripping surface shall be 4 inches (*102* mm) minimum and 6 inches (*152* mm) maximum above the step nosing and transfer platform. Grab bars shall comply with *Section 11B*-609 and be located on at least one side of the transfer system. The grab bar located at the transfer platform shall not obstruct transfer.

Exception: Grab bars on transfer systems shall not be required to comply with *Section 11B*-609.4.

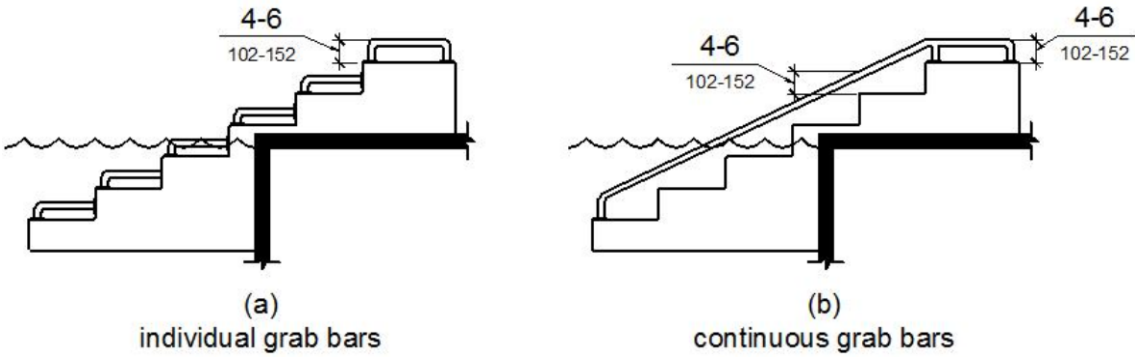

Figure *11B*-1009.5.7
Grab Bars

***11B*-1009.6 Pool stairs.** Pool stairs shall comply with *Section 11B*-1009.6.

***11B*-1009.6.1 Pool stairs.** Pool stairs shall comply with *Section 11B*-504.

Exception: Pool step riser heights shall not be required to be 4 inches (*102* mm) high minimum and 7 inches (*178* mm) high maximum provided that riser heights are uniform.

***11B*-1009.6.2 Handrails.** The width between handrails shall be 20 inches (*508* mm) minimum and 24 inches (610 mm) maximum. Handrail extensions required by *Section 11B*-505.10.3 shall not be required on pool stairs.

***11B*-1010 Shooting facilities with firing positions**

***11B*-1010.1 Turning space.** A circular turning space 60 inches (*1524* mm) diameter minimum with slopes not steeper than 1:48 shall be provided at shooting facilities with firing positions.

CHAPTER 16 – MATRIX ADOPTION TABLE

Adopting Agency		DSA	
		AC	SS
Adopt entire California Chapter			
Adopt entire California Chapter as amended (amended sections listed below)			
Adopt only those sections that are listed below		X	
Chapter / Section	Codes		
1607.8.2	CA	X	

SECTION 1607
LIVE LOADS

1607.8 Loads on handrails, guards, grab bars, *shower* seats*, dressing room bench seats* and vehicle barriers.

1607.8.2 Grab bars, shower seats and dressing room bench seats. Grab bars, shower seats and dressing room bench seat systems shall be designed to resist a single concentrated load of 250 pounds (1.11 kN) applied in any direction at any point on the grab bar or seat so as to produce the maximum load effects. ***[DSA-AC]*** *See Chapter 11A, Section 1127A.4, and Chapter 11B, Sections 11B-609.8, 11B-610.4 and 11B-903.6, for grab bars, shower seats and dressing room bench seats, as applicable.*

CHAPTER 16A – MATRIX ADOPTION TABLE

Adopting Agency		DSA	
		AC	SS
Adopt entire California Chapter			
Adopt entire California Chapter as amended (amended sections listed below)			
Adopt only those sections that are listed below		X	
Chapter / Section	Codes		
1607A.8.2	CA	X	

SECTION 1607A
LIVE LOADS

1607A.8 Loads on handrails, guards, grab bars, *shower* seats*, dressing room bench seats* and vehicle barriers.

1607A.8.2 Grab bars, shower seats and dressing room bench seats. Grab bars, shower seats and dressing room bench seat systems shall be designed to resist a single concentrated load of 250 pounds (1.11 kN) applied in any direction at any point on the grab bar or seat so as to produce the maximum load effects. ***[DSA-AC]*** *See Chapter 11A, Section 1127A.4, and Chapter 11B, Sections 11B-609.8, 11B-610.4 and 11B-903.6, for grab bars, shower seats and dressing room bench seats, as applicable.*

CHAPTER 30
ELEVATORS AND CONVEYING SYSTEMS

CHAPTER 30 – MATRIX ADOPTION TABLE

Adopting Agency		DSA	
		AC	SS
Adopt entire California Chapter			
Adopt entire California Chapter as amended (amended sections listed below)			
Adopt only those sections that are listed below		X	
Chapter / Section	Codes		
3001.1 w/ Exception	CA	X	
3001.3	CA	X	

SECTION 3001
GENERAL

3001.1 Scope. This chapter governs the design, construction, installation, alteration and repair of elevators and conveying systems and their components.

> ***Exception: [DSA-AC]*** *For accessibility requirements for platform lifts and elevators, see California Code of Regulations, Title 8 and Title 24, Part 2, Sections 11B-206.6, 11B-206.7, 11B-407 and 11B-410.*

3001.3 Accessibility. Passenger elevators *and platform (wheelchair) lifts* required to be accessible by Chapters 11*A or 11B* shall conform to *Chapter 11A for applications listed in Section 108.2.1.2 regulated by the Department of Housing and Community Development or Chapter 11B for applications listed in Section 1.9.1 regulated by the Division of the State Architect–Access Compliance.*

CHAPTER 31
SPECIAL CONSTRUCTION

CHAPTER 31 – MATRIX ADOPTION TABLE

Adopting Agency		DSA	
		AC	SS
Adopt entire California Chapter			
Adopt entire California Chapter as amended (amended sections listed below)			
Adopt only those sections that are listed below		X	
Chapter / Section	Codes		
3104.2, Exc 2	CA	X	

SECTION 3104
PEDESTRIAN WALKWAYS AND TUNNELS

3104.2 Separate structures. Connected buildings shall be considered to be separate structures.

Exceptions:

1. Buildings on the same lot in accordance with Section 503.1.2 shall be considered a single structure.

2. ***[DSA-AC]*** *For purposes of accessibility as required by Chapter 11A and Chapter 11B, structurally connected buildings, buildings connected by stairs, walkways, or roofs, and buildings with multiple wings shall be considered one structure.*

CHAPTER 31B
PUBLIC POOLS

CHAPTER 31B – MATRIX ADOPTION TABLE

Adopting Agency		DSA	
		AC	SS
Adopt entire California Chapter			
Adopt entire California Chapter as amended (amended sections listed below)			
Adopt only those sections that are listed below		X	
Chapter / Section	Codes		
3101B (last paragraph only)	CA	X	

SECTION 3101B
SCOPE

The provisions of this chapter shall apply to the construction, installation, renovation, alteration, addition, relocation, replacement or use of any public pool and to its ancillary facilities, mechanical equipment and related piping. Public pools include those located in or designated as the following: commercial building, hotel, motel, resort, recreational vehicle or mobile home park, campground, apartment house, condominium, townhouse, homeowner association, club, community building or area, public or private school, health club or establishment, water park, swim school, medical facility, bed and breakfast, licensed day-care facility, recreation and park district and municipal pools.

Note: *Existing law limits application of building standards. Please see Health and Safety Code Sections 18938.5 and 116050.*

[DSA-AC] *Refer to Chapter 11B for accessibility provisions applicable to public accommodations, commercial buildings and public housing.*

CHAPTER 33
SAFEGUARDS DURING CONSTRUCTION

CHAPTER 33 – MATRIX ADOPTION TABLE

Adopting Agency		DSA	
		AC	SS
Adopt entire California Chapter			
Adopt entire California Chapter as amended (amended sections listed below)			
Adopt only those sections that are listed below		X	
Chapter / Section	Codes		
3306.2	CA	X	

SECTION 3306
PROTECTION OF PEDESTRIANS

3306.2 Walkways. A walkway shall be provided for pedestrian travel in front of every construction and demolition site unless the applicable governing authority authorizes the sidewalk to be fenced or closed. Walkways shall be of sufficient width to accommodate the pedestrian traffic, but in no case shall they be less than 4 feet (1219 mm) in width. Walkways shall be provided with a durable walking surface. Walkways shall be accessible in accordance with *Chapter 11A or 11B as applicable,* and shall be designed to support all imposed loads and in no case shall the design live load be less than 150 pounds per square foot (psf) (7.2 kN/m^2).

CHAPTER 34
EXISTING STRUCTURES

CHAPTER 34 – MATRIX ADOPTION TABLE

Adopting Agency		DSA	
		AC	SS
Adopt entire California Chapter			
Adopt entire California Chapter as amended (amended sections listed below)			
Adopt only those sections that are listed below		X	
Chapter / Section	Codes		
3401.1 (last paragraph only)	CA	X	
3409 (1st paragraph only)	CA	X	

SECTION 3401
GENERAL

3401.1 Scope. The provisions of this chapter shall control the alteration, repair, addition and change of occupancy of existing buildings and structures.

Exception: Existing bleachers, grandstands and folding and telescopic seating shall comply with ICC 300.

[DSA-AC] *For applications listed in Section 1.9.1 regulated by the Division of the State Architect--Access Compliance for accessibility requirements, see Chapter 11B, Section 11B-202.*

SECTION 3409
HISTORIC BUILDINGS

[DSA-AC] *For applications listed in Section 1.9.1 regulated by the Division of the State Architect-Access Compliance for Qualified Historical Buildings, see California Code of Regulations, Title 24, Part 8 (California Historical Building Code).*

CHAPTER 35 – MATRIX ADOPTION TABLE

Adopting Agency		DSA	
		AC	SS
Adopt entire California Chapter			
Adopt entire California Chapter as amended (amended sections listed below)			
Adopt only those sections that are listed below		X	
Chapter / Section	Codes		
ANSI	CA	X	
ASME	CA	X	
BHMA	CA	X	
NFPA	CA	X	

CHAPTER 35
REFERENCED STANDARDS

This chapter lists the standards that are referenced in various sections of this document. The standards are listed herein by the promulgating agency of the standard, the standard identification, the effective date and title, and the section or sections of this document that reference the standard. The application of the referenced standards shall be as specified in *Chapter 1, Administration, Division 1, Sections 1.1.5 and 1.1.7, and in Chapter 1, Administration, Division II,* Section 102.4.

ANSI American National Standards Institute
25 West 43rd Street, Fourth Floor
New York, NY 10036

Standard Reference Number	Title	Referenced in code section number
S3.41	*American National Standard Specifications for Audible Emergency Evacuation Signal*	*907.5.2.1.3*

ASME American Society of Mechanical Engineers
Three Park Avenue
New York, NY 10016-5990

Standard Reference Number	Title	Referenced in code section number
ASME/A17.1 2007/CSA B44-07	Safety Code for Elevators and Escalators – with A17.1a/CSA B44a-08 Addenda	907.3.3, 911.1.5, 1007.4, 11B-407.1, 11B-407.2.2, 11B-407.4.9, 11B-408.1, 11B-409.1, 11B-410.1, 11B-810.9, 1607.9.1, 3001.2, 3001.4, 3002.5, 3003.2, 3007.1, 3007.2,

		..... 3008.2, 3008.2.1, 3008.7.6, 3008.8.1, 3411.8.2
A18.1-2008	Safety Standard for Platform Lifts and Stairway Chairlifts	..... 1109.8, 2702.2.6, 3411.8.3

USDOJ

Advisory ASME. ASME A17.1 is used by local jurisdictions throughout the United States for the design, construction, installation, operation, inspection, testing, maintenance, alteration, and repair of elevators and escalators. The majority of the requirements apply to the operational machinery not seen or used by elevator passengers. ASME A17.1 requires a two-way means of emergency communications in passenger elevators. This means of communication must connect with emergency or authorized personnel and not an automated answering system. The communication system must be push button activated. The activation button must be permanently identified with the word "HELP." A visual indication acknowledging the establishment of a communications link to authorized personnel must be provided. The visual indication must remain on until the call is terminated by authorized personnel. The building location, the elevator car number, and the need for assistance must be provided to authorized personnel answering the emergency call. The use of a handset by the communications system is prohibited. Only the authorized personnel answering the call can terminate the call. Operating instructions for the communications system must be provided in the elevator car.

The provisions for escalators require that at least two flat steps be provided at the entrance and exit of every escalator and that steps on escalators be demarcated by yellow lines 2 inches wide maximum along the back and sides of steps.

ASME A18.1 addresses the design, construction, installation, operation, inspection, testing, maintenance and repair of lifts that are intended for transportation of persons with disabilities. Lifts are classified as: vertical platform lifts, inclined platform lifts, inclined stairway chairlifts, private residence vertical platform lifts, private residence inclined platform lifts, and private residence inclined stairway chairlifts.

This document does not permit the use of inclined stairway chairlifts which do not provide platforms because such lifts require the user to transfer to a seat.

ASME A18.1 contains requirements for runways, which are the spaces in which platforms or seats move. The standard includes additional provisions for runway enclosures, electrical equipment and wiring, structural support, headroom clearance (which is 80 inches minimum), lower level access ramps and pits. The enclosure walls not used for entry or exit are required to have a grab bar the full length of the wall on platform lifts. Access ramps are required to meet requirements similar to those for ramps in Chapter 4 of this document.

Each of the lift types addressed in ASME A18.1 must meet requirements for capacity, load, speed, travel, operating devices, and control equipment. The maximum permitted height for operable parts is consistent with Section 308 of this document. The standard also addresses attendant operation. However, Section 410.1 of this document does not permit attendant operation. ■

ASTM	ASTM International 100 Barr Harbor Drive West Conshohocken, PA 19428-2959	
Standard Reference Number	Title	Referenced in code section number

USDOJ

Advisory 105.2.3 ASTM. ASTM F 1292 establishes a uniform means to measure and compare characteristics of surfacing materials to determine whether materials provide a safe surface under and around playground equipment. This standard is referenced in the play areas requirements of this document when an accessible surface is required inside a play area use zone where a fall attenuating surface is also required. The standard covers the minimum impact attenuation requirements, when tested in accordance with Test Method F 355, for surface systems to be used under and around any piece of playground equipment from which a person may fall.

ASTM F 1487 establishes a nationally recognized safety standard for public playground equipment to address injuries identified by the U.S. Consumer Product Safety Commission. It defines the use zone, which is the ground area beneath and immediately adjacent to a play structure or play equipment designed for unrestricted circulation around the equipment and on whose surface it is predicted that a user would land when falling from or exiting a play structure or equipment. The play areas requirements in this document reference the ASTM F 1487 standard when defining accessible routes that overlap use zones requiring fall attenuating surfaces. If the use zone of a playground is not entirely surfaced with an accessible material, at least one accessible route within the use zone must be provided from the perimeter to all accessible play structures or components within the playground.

ASTM F 1951 establishes a uniform means to measure the characteristics of surface systems in order to provide performance specifications to select materials for use as an accessible surface under and around playground equipment. Surface materials that comply with this standard and are located in the use zone must also comply with ASTM F 1292. The test methods in this standard address access for children and adults who may traverse the surfacing to aid children who are playing. When a surface is tested it must have an average work per foot value for straight propulsion and for turning less than the average work per foot values for straight propulsion and for turning, respectively, on a hard, smooth surface with a grade of 7% (1:14). ■

BHMA Builders Hardware Manufacturers' Association
355 Lexington Avenue, 17th Floor
New York, NY 10017-6603

Standard Reference Number	Title	Referenced in code section number
A 156.10-2011	Power Operated Pedestrian Doors	11B-404.2.9, 11B-404.3, 1008.1.4.2
A 156.19-2007	Standard for Power Assist and Low Energy Operated Doors	11B-404.2.9, 11B-404.3, 11B-408.3.2.1, 11B-409.3.1, 1008.1.4.2

USDOJ

Advisory ANSI/BHMA. ANSI/BHMA A156.10 applies to power operated doors for pedestrian use which open automatically when approached by pedestrians. Included are provisions intended to reduce the chance of user injury or entrapment.

ANSI/BHMA A156.19 applies to power assist doors, low energy power operated doors or low energy power open doors for pedestrian use not provided for in ANSI/BHMA A156.10 for

Power Operated Pedestrian Doors. Included are provisions intended to reduce the chance of user injury or entrapment. ■

NFPA	National Fire Protection Association 1 Batterymarch Park Quincy, MA 02169-7471

Standard Reference Number	Title	Referenced in code section number
72-10	National Fire Alarm Code*, as amended**	901.6, 903.4.1, 904.3.5, 907.2, 907.2.5, 907.2.11, 907.2.13.2, 907.3, 907.3.3, 907.3.4, 907.5.2.1.2, 907.5.2.2, 907.6, 907.6.1, 907.6.5, 907.7, 907.7.1, 907.7.2, 911.1.5, 3006.5, 3007.6

NFPA 72, Amended Sections as follows:

10.3.1 Equipment constructed and installed in conformity with this Code shall be listed for the purpose for which it is used. *Fire alarm Systems and components shall be California State Fire Marshal approved and listed in accordance with California Code of Regulations, Title 19, Division 1.*

10.3.3 All devices and appliances that receive their power from the initiating device circuit or signaling line circuit of a control unit shall be *California State Fire Marshal* listed for use with the control unit.

10.6.1 *Where approved by the authority having jurisdiction*, ECS priority signals when evaluated by stakeholders through risk analysis in accordance with 24.4.2.2 shall be permitted to take precedence over all other signals.

14.4.7.1 Testing. Household fire alarm systems shall be tested 'in *accordance with the manufacturer's published instructions'* according to the methods of Table 14.4.2.2.

17.15 Fire Extinguisher Monitoring Device. A fire extinguisher monitoring device shall indicate those conditions for a specific fire extinguisher required by *California Code of Regulations, Title 19, Division 1, Chapter 1, Section 574.2 (c) and California Fire Code to a fire alarm control unit.*

21.3.6 Smoke detectors shall not be installed in unsprinklered elevator hoistways unless they are installed to activate the elevator hoistway smoke relief equipment *or where required by Chapter 30 of the California Building Code.*

23.4.2.2 (4) Where the vertically run conductors are contained in a 2-hour rated cable assembly, or enclosed (installed) in a 2-hour rated enclosure or a listed circuit integrity (C.I.) cable, which meets or exceeds a 2-hour fire resistive rating.

23.8.5.1.2) Where connected to a supervising station, fire alarm systems employing automatic fire detectors or waterflow detection devices shall include a manual fire alarm box to initiate a signal to the supervising station.

Exception: Fire alarm systems dedicated to elevator recall control, supervisory service *and fire sprinkler monitoring .*

23.8.5.4.1 Systems equipped with alarm verification features shall be permitted under the following conditions:

(1) The alarm verification feature is not initially enabled unless conditions or occupant activities that are expected to cause nuisance alarms are anticipated in the area that is protected by the smoke detectors. Enabling of the alarm verification feature shall be protected by password or limited access.

(2) A smoke detector that is continuously subjected to a smoke concentration above alarm threshold does not delay the system functions of Sections 10.6 through 10.13, 23.8.1.1, or 21.2.1 by more than *30 seconds*.

(3) Actuation of an alarm-initiating device other than a smoke detector causes the system functions of 4.4.3, 6.8.1.1, or 6.16.2.1 without additional delay.

(4) The current status of the alarm verification feature is shown on the record of completion *(see Figure 4.5.2.1, item 10)*.

(5) Operation of a patient room smoke detector in I-2 and R-2.1 Occupancies shall not include an alarm verification feature.

29.3.1 All devices, combinations of devices, and equipment to be installed in conformity with this chapter shall be approved or listed *by the California State Fire Marshal* the for the purposes for which they are intended.

29.5.2.1.1* Smoke and Heat Alarms. Unless exempted by applicable laws, codes, or standards, smoke or heat alarms used to provide a fire-warning function, and when two or more alarms are installed within a dwelling unit, suite of rooms, or similar area, shall be arranged so that the operation of any smoke or heat alarm causes all alarms within these locations to sound.

29.7.2.1 *The alarm verification feature shall not be used for household fire warning equipment.*

29.7.5.7.1 *The alarm verification feature shall not be used for household fire warning equipment.*